TOOL®
SHOP

241-9885



3/8” ANGLE DRILL

OPERATOR’S MANUAL

SAVE THIS MANUAL
You will need this manual for safety instructions, operating procedures and warranty.
Put it and the original sales receipt in a safe dry place for future reference.

IMPORTANT SAFETY INSTRUCTIONS

WARNING: *When using electric tools, machines or equipment, basic safety precautions should always be followed to reduce the risk of fire, electric shock, and personal injury.*



TOOL SHOP®

READ ALL INSTRUCTIONS BEFORE USING THIS TOOL

1. **KEEP WORK AREA CLEAN.** Cluttered areas invite injuries.
2. **CONSIDER WORK AREA ENVIRONMENT.** Don't use power tools in damp, wet, or poorly lit locations. Don't expose your tool to rain. Keep the work area well lit. Don't use tools in the presence of flammable gases or liquids.
3. **KEEP CHILDREN AND BYSTANDERS AWAY.** All children should be kept away from the work area. Don't let them handle machines, tools or extension cords. Visitors can be a distraction and are difficult to protect from injury.
4. **GROUNDED TOOLS** must be plugged into an outlet that itself is properly installed and grounded. Grounding provides a low-resistance path to carry electricity to ground away from the operator, should the tool malfunction electrically. Do not remove the grounding prong from the plug or alter the plug in any way. If in doubt as to whether the outlet is properly grounded according to code, check with a qualified electrician.
5. **OBSERVE PROPER PRECAUTIONS REGARDING DOUBLE INSULATION.** This tool is double insulated. It is equipped with a polarized plug. One blade is wider than the other, so it will fit into a polarized outlet only one way. If you have difficulty inserting the plug, try reversing it. If it still doesn't fit , do not alter the plug; have a qualified electrician install a polarized outlet.
6. **GUARD AGAINST ELECTRIC SHOCK.** Prevent body contact with grounded surfaces: pipes, radiators, ranges, and refrigerator enclosures. When your body is grounded the risk of electric shock increases. When working wherever "live" electrical wires may be encountered, try to ascertain whether there is a danger of shock. Even so, DO NOT TOUCH ANY METAL PARTS OF THE TOOL while using it. Hold the tool only by the plastic grip to prevent electric shock if you contact a live wire.
7. **DO NOT ABUSE THE CORD.** Never carry power tool by the cord or pull on the cord to unplug it. Protect the cord from potential sources of damage: heat, oil & solvents, sharp edges, or moving parts. Replace damaged cords immediately.
8. **WHEN WORKING OUTDOORS, USE AN OUTDOOR-RATED EXTENSION-CORD.** An extension cord rated for outdoor use must be marked "W-A" or "W".
9. **DO NOT EXPOSE ELECTRICAL POWER TOOLS TO MOISTURE.** Rain or wet conditions can cause water to enter the tool and lead to electric shock.
10. **ENSURE THE EXTENSION CORD YOU USE IS OF SUFFICIENT GAUGE FOR ITS LENGTH.**

Recommended Minimum Wire Gauge for Extension Cords

Amps from Tool Nameplate	25' length	50' length	75' length	100' length	150' length	200' length
0-5 amps	16 ga.	16 ga.	16 ga.	14 ga.	12 ga.	12 ga.
5.1-8 amps	16 ga.	16 ga.	14 ga.	12 ga.	10 ga.	Do Not Use
8.1-12 amps	14 ga.	14 ga.	12 ga.	10 ga.	Do Not Use	Do Not Use
12.1-15 amps	12 ga.	12 ga.	10 ga.	10 ga.	Do Not Use	Do Not Use
15.1-20 amps	10 ga.	10 ga.	10 ga.	Do Not Use	Do Not Use	Do Not Use

11. **STORE IDLE EQUIPMENT.** Store equipment in a dry area to inhibit rust. Equipment also should be in a high location or locked up to keep out of reach of children.
12. **DON'T FORCE THE TOOL.** It will do the job better and more safely at the rate for which it was intended.

IMPORTANT SAFETY INSTRUCTIONS

TOOL® SHOP

13. **USE THE RIGHT TOOL.** Don't force a small tool or attachment to do the work of a larger industrial tool. Don't use a tool for a purpose for which it was not intended.
14. **DRESS PROPERLY.** Don't wear loose clothing or jewelry; they can be caught in moving parts. Protective, non-electrically conductive gloves and non-skid footwear are recommended when working. Wear protective hair covering to contain long hair and keep it from harm.
15. **USE EYE PROTECTION.** Use a full-face mask if the work you're doing produc es metal filings, dust or wood chips. Goggles are acceptable in other situations. Wear a clean dust mask if the work involves creating a lot of fine or coarse dust.
16. **SECURE WORK.** Use clamps or a vise to hold the work. It's safer than using your hands and it frees both hands to operate the tool.
17. **DON'T OVERREACH.** Keep proper footing and balance at all times. Do not reach over or across machines that are running.
18. **MAINTAIN TOOLS WITH CARE.** Keep tools sharp and clean for better and safer performance. Follow instructions for lubricating and changing accessories. For safe performance, keep handles dry, clean and free from oil and grease.
19. **AVOID UNINTENTIONAL STARTING.** Be sure the switch is in the **OFF** position before plugging in.
20. **ALWAYS CHECK AND MAKE SURE TO REMOVE ANY ADJUSTING KEYS OR WRENCHES** before turning the tool on. Left attached, these parts can fly off a rotating part and result in personal injury.
21. **DO NOT USE THE TOOL IF IT CANNOT BE SWITCHED ON OR OFF.** Have your tool repaired before using it.
22. **DISCONNNECT THE PLUG FROM POWER BEFORE MAKING ANY AD-JUSTMENTS.** Changing attachments or accessories can be dangerous if the tool could accidentally start.
23. **STAY ALERT.** Watch what you are doing & use common sense. Don't operate any tool when you are tired.
24. **CHECK FOR DAMAGED PARTS.** Before using this tool, any part that is damaged should be carefully checked to determine that it will operate properly and perform its intended function. Check for alignment of moving parts, binding of moving parts, breakage of parts, mountings, and other conditions that may affect its operation. Inspect screws and tighten any ones that are loose. Any part that is damaged should be properly repaired or replaced by an authorized service center unless otherwise indicated elsewhere in the instruction manual. Have defective switches replaced by an authorized service center. Don't use the tool if switch does not turn it on and off properly.
25. **REPLACEMENT PARTS.** When servicing, use only identical replacement parts.
26. **SERVICE AND REPAIRS** should be made by qualified repair technicians at an authorized repair centre. Improperly repaired tools could cause serious shock or injury

SAFETY PRECAUTIONS



ALWAYS CHECK THE SPEED RATING OF ACCESSORIES. *This tool will spin accessories at up to* 1400 *rpm. Accessories not rated for speeds this high will very likely fly apart and could cause serious injury.*

SPECIFICATIONS

- Voltage: 120 volts AC, 60Hz.
- Current rating: 3.8 amps
- No load speed: 0-1400 rpm
- 3/8”-10 mm keyless chuck
- Trigger-controlled variable speed
- Convenient above-the-trigger reverse switch
- Lock-on button

TOOL SHOP®

FUNCTION DESCRIPTION

A. Variable speed trigger
B. Forward / Reverse / Neutral switch
C. 3/8” Keyless chuck
D. Chuck lock button
E. Trigger-lock button
F. Rubber grip handle
G. Motor brush dust cover cap

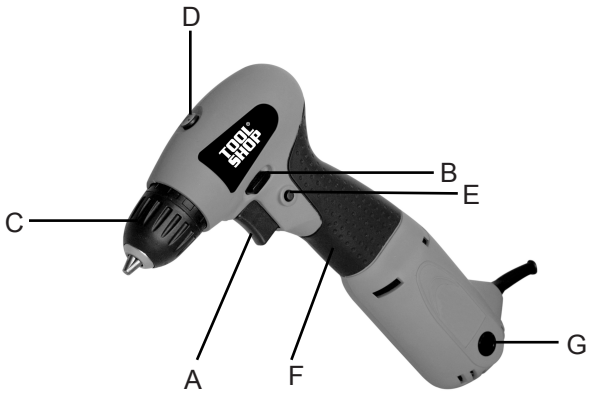

OPERATING PROCEDURES

OPERATING THE CHUCK

Be sure the drill is disconnected from power.
The angle drill is equipped with a 3/8” keyless chuck that will accept drill bits with a 1/16 inch to 3/8 inch shank.
Installing a drill bit into the drill chuck requires the use of the chuck lock button. Always make sure the drill bits are firmly secured into the drill chuck prior to using the drill.

RUNNING THE DRILL

1. Plug in the tool.
2. Hold the tool firmly. Squeezing the trigger more will increase the speed.
3. To maintain a certain speed when set on the adjustment wheel, engage the trigger-lock button on the left side of the handle when squeezing the trigger switch.
4. To disengage the trigger-lock button, squeeze the trigger.

To change the chuck rotation direction, move the rotation direction switch above the trigger to the other side. Setting the direction switch to the right causes the drill to turn clockwise, for normal drilling. The direction switch moved to the left will cause the drill to run in reverse (counterclockwise) direction, backing drill bits and screws out of their holes.

Warning: *Turn off your drill at once, unplug and inspect it for serious problems if:*

- *Moving parts get stuck*
- *Speed drops to an abnormally low level*
- *The motor housing gets hot*
- *Sparks or odors emit from the casing*

OPERATING PROCEDURES

TOOL SHOP®

Metal Drilling

Use a sharp drill bit especially designed to cut the material you are working on. It is recommended you use a cutting luid on the metal surface to avoid heat build-up.

MAINTENANCE

CAUTION! *Always be sure that the tool is switched off and unplugged before attempting to perform inspection or maintenance.*

- Inspect the tool before each use. Inspect the switch, the power plug and cord assembly for damage. Check for loose screws, misalignment, binding of moving parts, broken, cracked or improper mounting of the bits and attachments, broken parts and any other condition that may affect safe operation. If abnormal noise or vibration occurs, turn off the tool immediately and have the problem corrected before further usage.
- Do not use damaged equipment or serious injury could result.
- Avoid overloading your angle drill. Do not force the tool. It will become hot and lose efficiency. Running it free of load for a minute or two will allow it to cool itself to normal temperature.
- Brushes: This tool has two Carbon Motor Brushes (See Schematic Drawing #19 on page 6) that should be periodically examined for wear. After long use, the brushes in your tool may become worn. This may be evident from a burning smell or excessive sparking visible through the ventilation holes while the tool is running. To inspect or replace the carbon motor brushes:

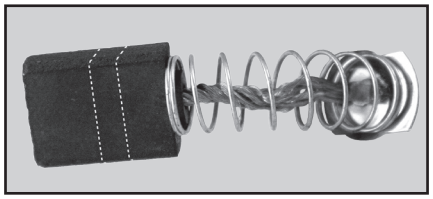

1. Unscrew the black plastic Motor Brush Cover (See Schematic Drawing #18 on page 6) using a slot screwdriver slowly remove the cover as the brushes are spring-loaded and may jump free, strike a hard surface, and chip.
2. Remove the brushes and examine the black rectangular carbon portions. Examine the concave, wearing surfaces. They should be smooth and clean. If there are large scratch marks, chips broken off and other damage, replace both brushes immediately. When new, these are about 7/16" long ***(see fig. at right)***. We recommend they be replaced when worn about 1/2 way down or at about 1/4"remaining. After this point, they are not held at a steady angle and constant pressure.
3. When the brushes are worn to 1/3 of their original length, about 1/8", they must be replaced or damage to the motor could result.
4. Insert the brushes so that the rectangular carbon portion slides in the slots in the brass holders.
5. Replace the black plastic Motor Brush Cover over the brass cap, screwing it in by hand to hold it in place.
7. Screw it down properly with a slot screwdriver. Do not over-tighten.
8. Always replace both brushes at the same time.
9. Keep the carbon brushes clean and free to slip in the holders.

When first using the tool with fresh brushes, you will notice a certain amount of sparking. This is normal and will continue until the brush contact surface attains a correct concave profile to match the rotor on the motor.

- Keep the tool housing clean; free of oil, and grease. If necessary, use mild soap and a damp (not wet) cloth. **DO NOT** *let solvents like brake fluid, gasoline, petroleum-based products, etc., contact plastic parts of the housing.* Cleaning with these substances can harm the plastic and compromise the integrity of the double insulating system.
- Clean the tool of all sawdust. Keep the vents clear of dust and debris. Use a brush, soft cloth, or a vacuum cleaner. This will help prevent possible electrical shorts and ensure proper cooling.
- Use care to see that the motor winding does not become damaged or wet with oil or water.
- An authorized repair center should do any repairs, modification, or maintenance that involve opening or disassembling the tool.
- Any damage to the tool should be corrected at an authorized repair center.

PARTS LIST

TOOL SHOP®

Part #	Description	Qty.	Part #	Description	Qty.
1	Screw (M5 x 20 Left)	1	19	Carbon Brush	2
2	Spring Washer (5)	1	20	Brush Holder	2
3	Drill Chuck	1	21	Gear Spindle (Z1)	1
4	Motor Housing	1	22	Ball Bearing (626)	1
5	Gear Housing	1	23	Link Bushing	1
6	Rubber Pin	1	24	Ball Bearing (608)	1
7	Ball Bearing (6002)	1	25	Armature	1
8	Pin	3	26	Ball Bearing (607)	1
9	Gear (Z4)	1	27	Field	1
10	Spindle	1	28	Screw (M4 x 20)	3
11	Gear (Z5)	1	29	Rubber Pin	1
12	Gear Spindle (Z3)	1	30	Trigger	1
13	Ball Bearing (626)	1	31	Power Cord/Plug	1
14	Gear (Z2)	1	32	Screw (ST4.2 x 14)	8
15	Ball Bearing (625)	1	33	Trigger Lock	1
16	Gear Housing Cover	1	34	Forward/Reverse Switch	1
17	Motor Housing Cover	1	35	Chuck lock button	1
18	Brush Holder Cover	2			

SCHEMATIC DRAWING

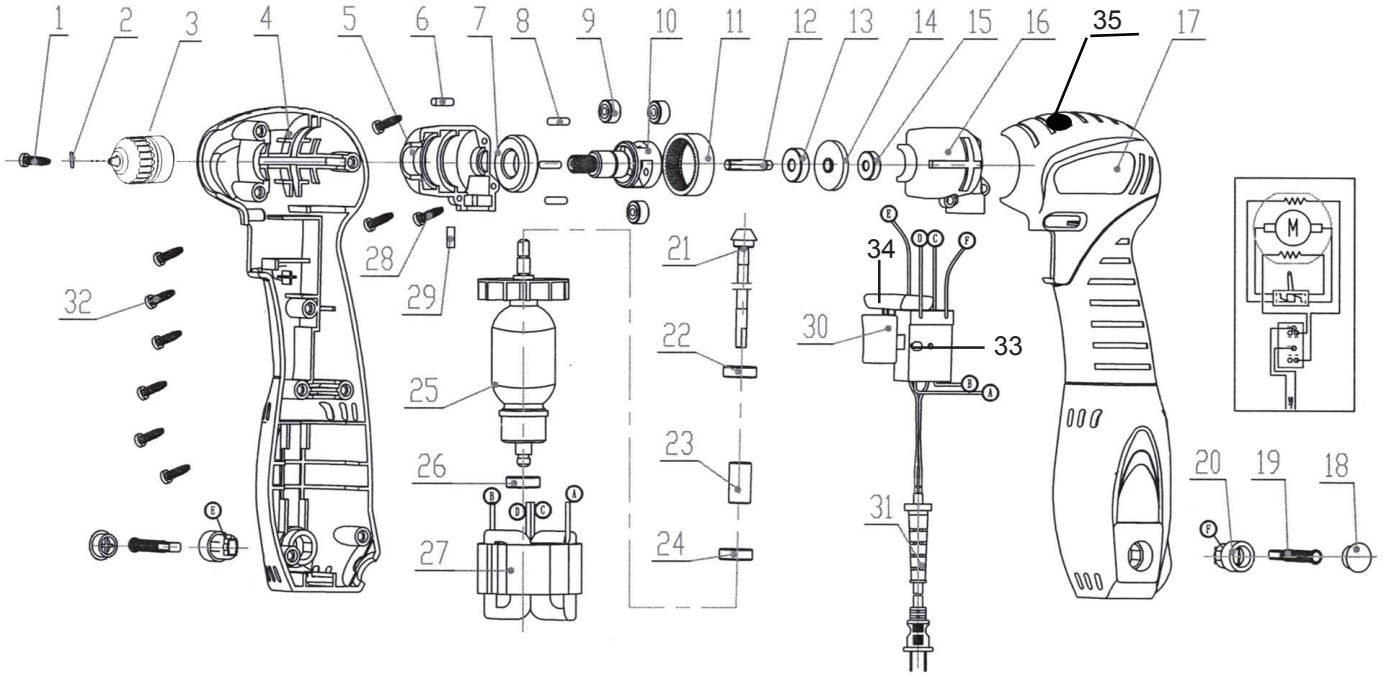

WARNING *Repairs should be made by an authorized repair center.Do not open or disassemble this power tool. Contact Sharp Group Development Limited at* 1-866-915-8626 *for questions regarding this power tool.*