TOOLSHOP®

241-9801



3” X 21”
VARIABLE SPEED BELT SANDER

Operator’s Manual

SAVE THIS MANUAL

You will need this manual for safety instructions, operating procedures and warranty. Put it and the original sales receipt in a safe dry place for future reference.

IMPORTANT SAFETY INSTRUCTIONS

WARNING: *When using electric tools, machines or equipment, basic safety precautions should always be followed to reduce the risk of fire, electric shock, and personal injury.*



READ ALL INSTRUCTIONS BEFORE USING THIS TOOL

1. **KEEP WORK AREA CLEAN.** Cluttered areas invite injuries.
2. **CONSIDER WORK AREA ENVIRONMENT.** Don't use power tools in damp, wet, or poorly lit locations. Don't expose your tool to rain. Keep the work area well lit. Don't use tools in the presence of flammable gases or liquids.
3. **KEEP CHILDREN AND BYSTANDERS AWAY.** All children should be kept away from the work area. Don't let them handle machines, tools or extension cords.
   Visitors can be a distraction and are difficult to protect from injury.
4. **GROUNDED TOOLS** must be plugged into an outlet that itself is properly installed and grounded. Grounding provides a low-resistance path to carry electricity away from the operator, should the tool malfunction electrically. Do not remove the grounding prong from the plug or alter the plug in any way. If in doubt as to whether the outlet is properly grounded according to code, check with a qualified electrician.
5. **OBSERVE PROPER PRECAUTIONS REGARDING DOUBLE INSULATION.** This tool is double insulated. It is equipped with a polarized plug. One blade is wider than the other, so it will fit into a polarized outlet only one way. If you have difficulty inserting the plug, try reversing it. If it still doesn't fit , do not alter the plug; have a qualified electrician install a polarized outlet.
6. **GUARD AGAINST ELECTRIC SHOCK.** Prevent body contact with grounded surfaces: pipes, radiators, ranges, and refrigerator enclosures. When your body is grounded the risk of electric shock increases. When working wherever "live" electrical wires may be encountered, try to ascertain whether there is a danger of shock. Even so, DO NOT TOUCH ANY METAL PARTS OF THE TOOL while using it. Hold the tool only by the plastic grip to prevent electric shock if you contact a live wire.
7. **DO NOT ABUSE THE CORD.** Never carry your tool by the cord or pull on the cord to unplug it. Protect the cord from potential sources of damage: heat, oil & solvents, sharp edges, or moving parts. Replace damaged cords immediately.
8. **WHEN WORKING OUTDOORS, USE AN OUTDOOR-RATED EXTENSION CORD.** An extension cord rated for outdoor use must be marked "W-A" or "W".
9. **DO NOT EXPOSE ELECTRICAL POWER TOOLS TO MOISTURE.** Rain or wet conditions can cause water to enter the tool and lead to electric shock.
10. **ENSURE THE EXTENSION CORD YOU USE IS OF SUFFICIENT GAUGE FOR ITS LENGTH.**

Recommended Minimum Wire Gauge for Extension Cords

Amps from Tool Nameplate	25' length	50' length	75' length	100' length	150' length	200' length
0-5 amps	16 ga.	16 ga.	16 ga.	14 ga.	12 ga.	12 ga.
5.1-8 amps	16 ga.	16 ga.	14 ga.	12 ga.	10 ga.	Do Not Use
8.1-12 amps	14 ga.	14 ga.	12 ga.	10 ga.	Do Not Use	Do Not Use
12.1-15 amps	12 ga.	12 ga.	10 ga.	10 ga.	Do Not Use	Do Not Use
15.1-20 amps	10 ga.	10 ga.	10 ga.	Do Not Use	Do Not Use	Do Not Use

11. **STORE IDLE EQUIPMENT.** Store equipment in a dry area to inhibit rust. Equipment also should be in a high location or locked up to keep out of reach of children.
12. **DON'T FORCE THE TOOL.** It will do the job better and more safely at the rate for which it was intended.
13. **USE THE RIGHT TOOL.** Don't force a small tool or attachment to do the work of a larger industrial tool. Don't use a tool for a purpose for which it was not intended.
14. **DRESS PROPERLY.** Don't wear loose clothing or jewelry; they can be caught in moving parts. Protective, non-electrically conductive gloves and non-skid footwear are recommended when working. Wear protective hair covering to contain long hair and keep it from harm.

IMPORTANT SAFETY INSTRUCTIONS

15. **USE EYE PROTECTION.** Use a full-face mask if the work you're doing produces metal filings, dust or wood chips. Goggles are acceptable in other situations. Wear a clean dust mask if the work involves creating a lot of fine or coarse dust.
16. **SECURE WORK.** Use clamps or a vise to hold the work. It's safer than using your hands and it frees both hands to operate the tool.
17. **DON'T OVERREACH.** Keep proper footing and balance at all times. Do not reach over or across machines that are running.
18. **MAINTAIN TOOLS WITH CARE.** Keep tools sharp and clean for better and safer performance. Follow instructions for lubricating and changing accessories. For safe performance, keep handles dry, clean and free from oil and grease.
19. **AVOID UNINTENTIONAL STARTING.** Be sure the switch is in the **OFF** position before plugging in.
20. **ALWAYS CHECK AND MAKE SURE TO REMOVE ANY ADJUSTING KEYS OR WRENCHES** before turning the tool on. Left attached, these parts can fly off a moving part and result in personal injury.
21. **DO NOT USE THE TOOL IF IT CANNOT BE SWITCHED ON OR OFF.** Have your tool repaired before using it.
22. **DISCONNNECT THE PLUG FROM POWER BEFORE MAKING ANY ADJUSTMENTS.** Changing attachments or accessories can be dangerous if the tool accidentally starts.
23. **STAY ALERT.** Watch what you are doing & use common sense. Don't operate any tool when you are tired.
24. **CHECK FOR DAMAGED PARTS.** Before using this tool, any part that is damaged should be carefully checked to determine that it will operate properly and perform its intended function. Check for alignment of moving parts, binding of moving parts, breakage of parts, mountings, and other conditions that may affect its operation. Inspect screws and tighten any ones that are loose. Any part that is damaged should be properly repaired or replaced by an authorized service center unless otherwise indicated elsewhere in the instruction manual. Have defective switches replaced by an authorized service center. Don't use the tool if switch does not turn it on and off properly.
25. **REPLACEMENT PARTS.** When servicing, use only identical replacement parts.
26. **SERVICE AND REPAIRS** should be made by qualified repair technicians at an authorized repair centre. Improperly repaired tools could cause serious shock or injury

SAFETY PRECAUTIONS FOR BELT SANDERS



- **HOLD TOOL BY THE INSULATED GRIPPING SURFACES WHEN PERFORMING AN OPERATION WHERE THE CUTTING TOOL MAY CONTACT HIDDEN WIRING OR ITS OWN CORD**. Contact with a "live" wire can cause exposed metal parts of the tool to become "live" and shock the operator.
- **HOLD THE TOOL FIRMLY WITH BOTH HANDS** on the hand grips.
- **MAKE SURE THE BELT IS NOT CONTACTING THE WORKPIECE BEFORE THE TOOL IS TURNED ON**.
- **KEEP HANDS AWAY FROM ROTATING PARTS.**
- **DO NOT LEAVE THE TOOL RUNNING** with the trigger locked. Operate only while holding the sander. Before plugging the tool in, be sure the trigger is "Off".
- **THIS TOOL IS NOT DESIGNED FOR USE WITH WATER OR, FOR WET SANDING.**
- **USE SPECIAL PRECAUTIONS WHEN SANDING MATERIALS IMPREGNATED OR COATED WITH TOXIC CHEMICALS EITHER AS A PRESERVATIVE OR LEAD-BASED PAINTS.** Use appropriate breathing apparatus and skin covering. Take precautions as well to prevent contamination of the environment with dust containing these persistent toxins. Check with your material supplier as to any possible toxicity.
- Keep the tool housing and handle clean and free of oil and grease using mild soapy water.

SPECIFICATIONS

- 120 volts AC, 7.2 Amps
- Sanding Belt size: 3” x 21”
- Variable speed dial: 393-1,240 SFPM
- Padded handle insert
- Dust bag
- Double Insulated
- C-UL US listed

APPLICATIONS
Sanding of wood and other materials
Paint and rust removal

FUNCTION DESCRIPTION

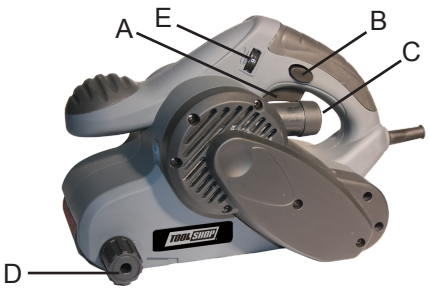

A. ON - OFF Switch
B. Lock on button
C. Dust extraction outlet
D. Belt tracking knob
E. Variable speed switch

OPERATING PROCEDURES

SWITCH

CAUTION: A sanding belt may have been installed at the factory and the belt tracking may not be set correctly. Follow steps 5 & 6 in REMOVING, INSTALLING, in REMOVING, INSTALLING, and ADJUSTING BELTS, below.

CAUTION: Before plugging the tool in, squeeze the trigger once and release it to be sure the trigger is “Off” and not locked “On”.
CAUTION: Be sure the belt is not in contact with the workpiece when starting the tool.

- Lift the tool off the workpiece, with one hand holding the handle at the front and the other grasping the handle at the rear.
- Squeeze the trigger in the rear handle with your index finger to start the tool. Release it to stop.
- To lock the trigger in the “On” position, press the small round button on the left side of the rear handle with your thumb at the same time as the trigger is squeezed fully with your index finger.

REMOVING, INSTALLING, and ADJUSTING BELTS

WARNING: To prevent injury, always switch off and disconnect the tool from power source before removing or installing the sanding belt.

1. Pull the belt tension lever from the right side of the sander and move it towards the front of the machine. This pulls the idler (front) pulley back. The old belt can be slid easily off the pulleys.
2. Check that the new 3”x 21” belt’s direction arrow (usually printed on the inside fabric backing of the belt) matches the direction of belt travel on the tool. The belt will move from the front to the back on the bottom, exposed surface of the tool. A belt installed backwards will not work as efficiently and have a shortened life.
3. Slide a 3”x 21” abrasive belt over the front and back pulleys and line it up so that it is as close to centered, with as little overhang as possible on both sides at both the front idler pulley and at the back drive pulley.

4. Push the tension lever back into the closed position. Take care not to pinch your fingers. The belt is now clamped in place.
5. Be sure the switch is off. Plug the tool in. The following may be easier if the tool is held upside down, resting on a bench. Do not let the abrasive belt contact anything.
6. Before starting the tool, re-set the belt drive tracking by turning the knob clockwise until resistance is felt and then back it of about 1 turn counterclockwise. Squeeze the trigger and run the tool slowly.
   If the belt starts to move to the left or right of the pulleys, the tracking should be adjusted more. This can be done by turning the tracking knob at the front left side of the tool. Turning the knob clockwise causes the belt to track toward the left. If you turn the knob the other way, the belt will track toward the right. Adjust until belt runs in the center without touching the housing on the left side of the tool or running off the pulleys on the right. The belt should not be more than 6mm (1/4") away from the edge of the bottom plate. If the belt touches the housing, fraying and shortened belt life as well as damage to the housing will result.
7. After running a new belt on a work piece for a short time, the tracking may need more adjustment.

DUST BAG

Fit the dust bag over the dust port on the left side of the sander near the rear handle. Dust extraction is most efficient if the bag is emptied whenever it reaches half full. Once in a while, it may be beneficial to turn the bag inside out and thoroughly clean it with a brush.
Do not use this sander without some form of dust collection.

SANDING

1. Secure the work piece well. It will tend to move toward the operator while the sander is running in contact with the surface.
2. Hold the tool firmly with both hands on the hand grips. When the belt comes in contact with the work surface, the tool will tend to pull itself forward quite strongly. To prevent damage to the material and the belt, never start the sander while the belt is in contact with the work surface.
3. Turn the tool on and let it come up to speed.
4. Gently lower it keeping the bottom plate roughly parallel with the surface.
5. Begin moving the sander forward. Drop the back very slightly so the belt contacts the work surface first at the rear, the heel of the sander. Continue to move the tool forward as you bring the belt into full contact with the surface. Use only very light downward pressure, if any.
6. Move the tool back. Continue this back and forth motion in overlapping strokes while sanding. This helps provide an even surface. Avoid putting weight on the tool as its own weight is usually sufficient. Too much weight can result in gouging and burning the surface, overloading the motor, and having the work piece kick back.
7. When sanding a rough wooden surface, placing the sander a slight angle to the grain, using a coarse grit, while moving the sander itself back and forth with the grain, may help speed stock removal. The same technique can be carried on through the medium grits. On the finishing grits, the sander should be oriented with the grain.
8. When finished sanding, lift the sander off the surface before releasing the trigger.

- Sanding direction is not critical on most materials other than wood, since grain direction is not a concern.
- Sanding flush against a perpendicular surface is possible along the right side of the tool.

OPERATING PROCEDURES

Use a grade of sandpaper that will make finer marks than those already on the surface. Too coarse a grade will not make the surface smoother while too fine a grade will remove scratches too slowly, or not at all. Continue using finer grades of sandpaper until you obtain the desired finish.

When removing old paint, determine how much paint really needs to be removed. Consider that old paint may well be toxic and will have to be treated with the respect due any toxic material both on the part of the tool operator and on the part of the environment. Wear appropriate breathing protection and dispose carefully of dust or chips left after sanding could be tracked throughout residences and release toxins into the soil. Use the provided dust bag as well. A finish that is cracking or flaking has to be taken off, but a finish that is still firmly attached can be “roughed up” and painted over with primer and the new finish. Always lightly sand the undercoat with fine grade sandpaper before applying the top coat.

MAINTENANCE

- Keep the vents clear of dust and debris. This will help prevent possible electrical shorts and ensure proper cooling.
- Keep the tool housing clean and free of oil and grease using mild soap and a damp (not wet) cloth.
- Avoid overloading your sander. It will become hot and lose efficiency. Running it free of load for a minute or two will allow it to cool itself to normal temperature.
- Inspect the cord regularly and have it replaced by an authorized repair facility if it is damaged.
- Lubrication for this tool is done at the factory and should not be necessary again under normal use.
- An authorized repair centre should do any repairs, modification, or maintenance that involve disassembling the tool.
- Any damage to the tool should be corrected at an authorized repair center.

PARTS LIST AND SCHEMATIC DRAWING

TOOLSHOP®

Item no.	Part name and spec	Item no.	Part name and spec
1	Sanding belt	34	Retaining
2	Screw ST4.8×20	35	Bearing 606Z
3	Front-cover	36	Shaft gear
4	Bottom plate	37	Bearing 608RS
5	Front-wheel frame left	38	Middle cover
6	Front-wheel frame right	39	Screw ST4.2×14
7	Spring	40	Small-belt-wheel
8	Front-wheel frame	41	Timming-Belt
9	Retaining	42	Belt cover
10	Front-wheel	43	Screw ST4.2×14
11	Needle bearing	44	Cover board
12	Ring washer	45	Fan guide
13	Subsidiary nameplate	46	Brush holder cover
14	Screw ST4.8×20	47	Carbon-brush
15	Right housing	48	Carbon-brush holder
16	Soft grip	49	Adjust-nut
17	Bearing 626	50	Wave-over Φ 8×Φ 12
18	Rear wheel axis	51	Close-over Φ 8× Φ 12
19	Rear wheel	52	Retaining 06
20	Ring washer	53	Adjust spring
21	Oil bearing	54	Stator
22	Rotor	55	Close over Φ 5
23	Grip	56	Screw ST4.8×50
24	Screw ST4.8×20	57	Insolated washer
25	Cable clamp		
26	Cable plug		
27	Cable cover		
28	Switch		
29	Shift-switch		
30	Left housing		
31	Bearing 608Z		
32	Big gear		
33	Pin Φ 3		

PARTS LIST AND SCHEMATIC DRAWING

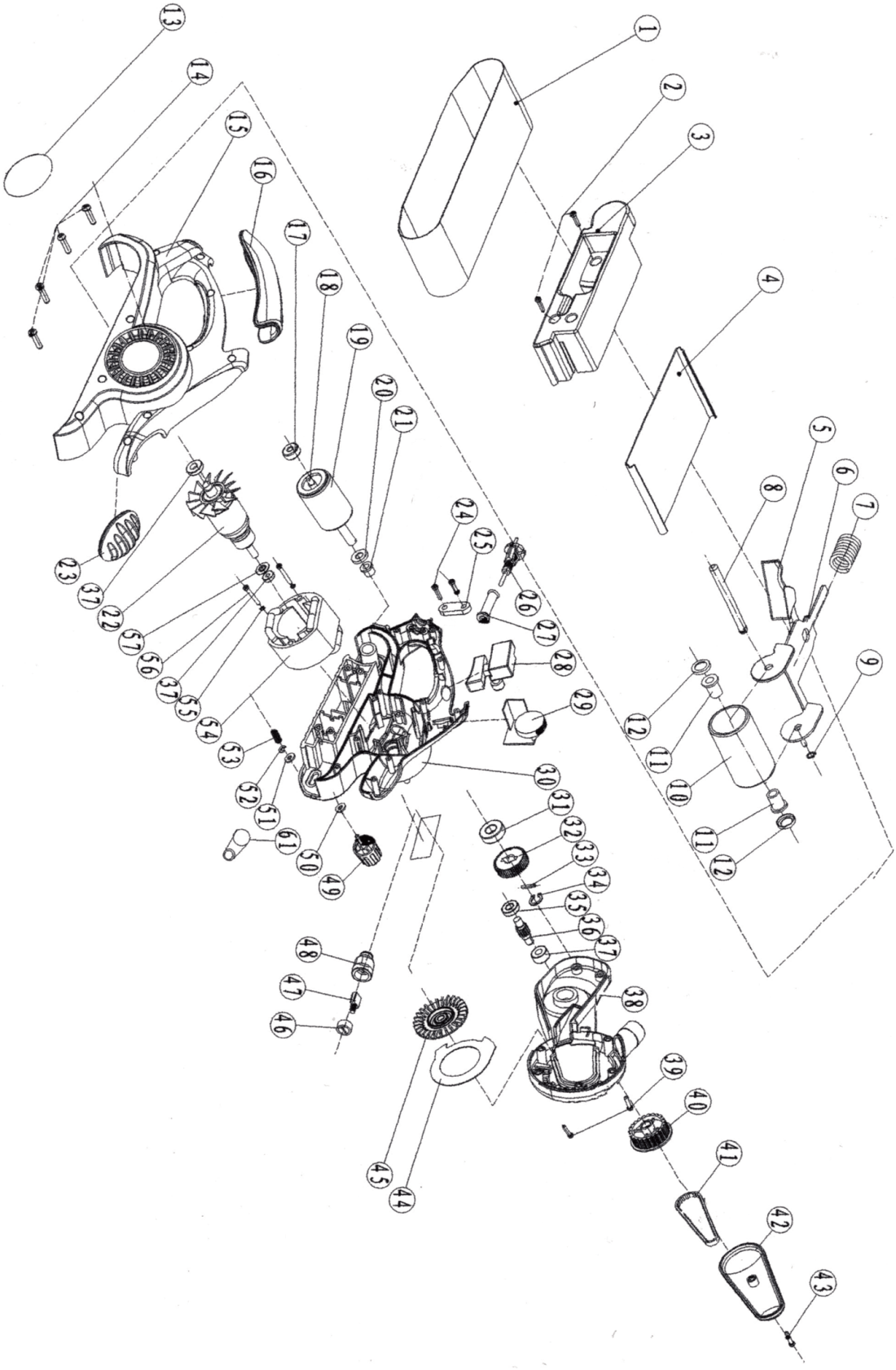

WARNING: *Repairs should be made by an authorized repair center. Do not open or disassemble this power tool. Contact at 1-866-915-8626 for questions regarding this power tool.*

TOOL SHOP® 3” X 21”VARIABLE SPEED BELT SANDER WARRANTY

1-YEAR LIMITED WARRANTY:

This TOOL SHOP® brand power tool carries a 1-Year Limited Warranty to the original purchaser. If the tool fails within one (1) year from the date of purchase, simply bring this tool with your original sales receipt back to your nearest MENARDS® retail store. At its discretion, TOOL SHOP® agrees to have the tool replaced with the same or similar TOOL SHOP® product free of charge, within the stated warranty period, when returned by the original purchaser with original sales receipt. Notwithstanding the foregoing, this limited warranty does not cover any damage that has resulted from abuse or misuse of the Merchandise. This warranty: (1) excludes expendable parts including but not limited to blades, belts, bits, light bulbs, and/or batteries; (2) shall be void if this tool is used for commercial and/or rental purposes; and (3) does not cover any losses, injuries to persons/property or costs. This warranty does give you specific legal rights and you may have other rights, which vary from state to state. Be careful, tools are dangerous if improperly used or maintained. Seller’s employees are not qualified to advise you on the use of this Merchandise. Any oral representation(s) made will not be binding on seller or its employees. The rights under this limited warranty are to the original purchaser of the Merchandise and may not be transferred to any subsequent owner. This limited warranty is in lieu of all warranties, expressed or implied including warranties or merchantability and fitness for a particular purpose. Seller shall not be liable for any special, incidental, or consequential damages. The sole exclusive remedy against the seller will be for the replacement of any defects as provided herein, as long as the seller is willing or able to replace this product or is willing to refund the purchase price as provided above. For insurance purposes, seller is not allowed to demonstrate any of these power tools for you.

For questions / comments, technical assistance or repair parts –
Please call toll free at: 1-866-915-8626 (M-F 8am – 5pm EST)

SAVE YOUR RECEIPTS. THIS WARRANTY IS VOID WITHOUT THEM.