Tuscany®

Installation Instructions
Exhaust Fan with Light



BPT14-24AL-1

Brushed Nickel



BPT14-24AL-2

Oil Rubbed Bronze

READ AND SAVE THESE INSTRUCTIONS.

Please read these instructions carefully before attempting to install, operate or service the ventilating fan. Failure to comply with instructions could result in personal injury and /or property damage. Please retain this booklet for future reference.

TABLE OF CONTENTS

Please read prior to installing this fan....1
Mounting accessories....2
Description....3
Wiring diagram....4
Specifications....4
Unpacking....4
General safety information & warnings....4-5
Installation I (Joist Mounting)....5
Installation II (In Existing Construction)....6
Maintenance....6
WARRANTY....7
WARRANTY CARD....8

PLEASE READ PRIOR TO INSTALLING THIS FAN

This line of ventilating fans employs state of the art technology providing a number of unique features that lead to improved in-door air quality. These features need to be fully understood prior to installation to realize the benefits the fans offers.

MOUNTING ACCESSORIES

BPT14-24AL-1/BPT14-24AL-2

Part name	Appearance	Quantity
Decorative pan with light kit		1
Bulbs (GU 24 13W)		2 (Sold separately)
Long screw		8
Screw I		1
Screw II		2
Suspension Bracket I	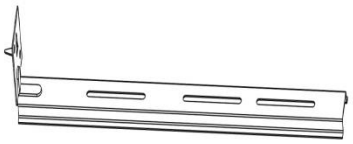	1
Suspension Bracket II	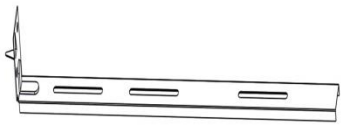	1
Suspension Bracket III	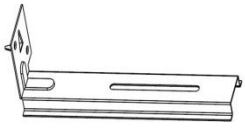	1

DESCRIPTION

This ventilating fan model uses a low noise fan driven motor. The motor is designed and manufactured to have an extended service life and operates very efficiently. There is a thermal cut-off for safety.

DIMENSIONS

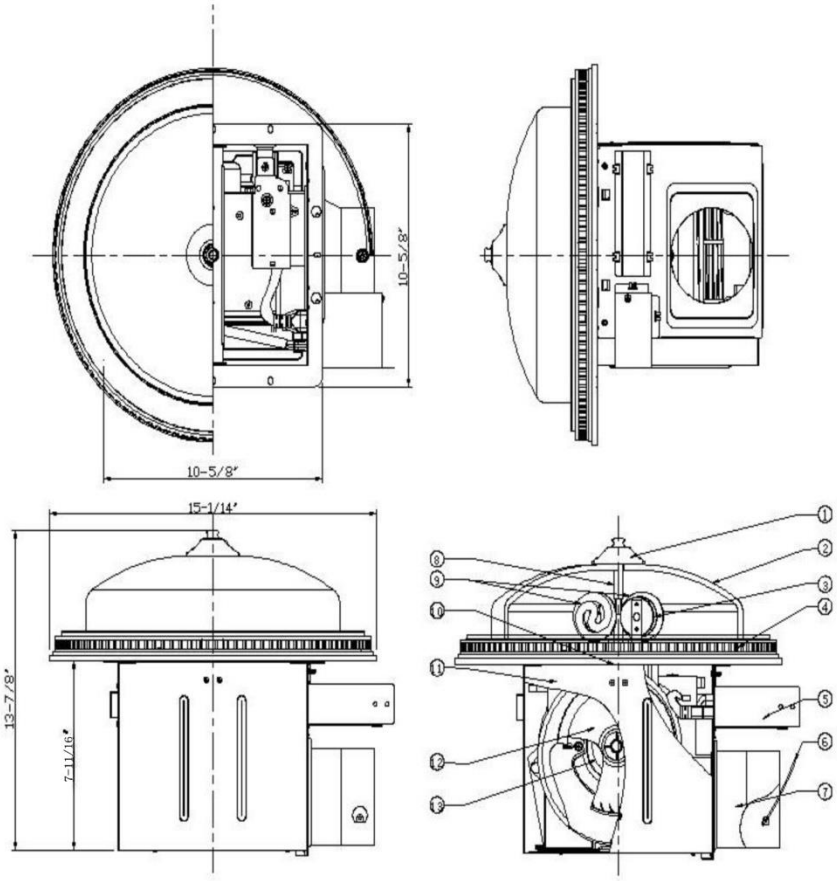

No.	Part Name	No.	Part Name
1	Finial	8	Connect screw
2	Glass shade	9	Gu24 bulbs
3	Socket	10	Support bracket
4	Grille	11	Fan body
5	Junction box cover	12	Blower wheel
6	Damper	13	Motor
7	Outlet		

WIRING DIAGRAM

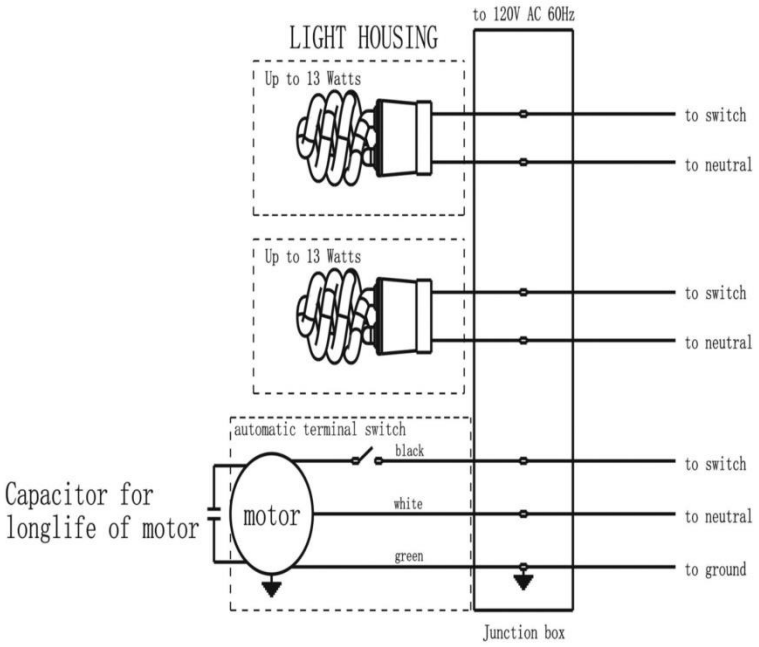

SPECIFICATIONS

Model No.	Air direction	V	HZ	DUCT diameter (inches)	Noise (sone)	Power consumption (w)	Speed (rmp)	Air deliver at 0.1" WG (cfm)	Weight (LB)
BPT14-24AL-1 BPT14-24AL-2	110CFM	120	60	4	1.2	55	1120	110CFM	16.73

UNPACKING

Unpack and carefully remove unit from carton.
Refer to the Mounting Accessories list to verify that all parts are present.

GENERAL SAFETY INFORMATION & WARNINGS

1. Electric Service supply must be 120V 60HZ.
2. Follow all local safety and electrical codes as well as NEC (National Electrical Code) and the OSHA (Occupational Safety and Health Act).
3. This unit must be properly grounded.
4. Always disconnect the power supply prior to servicing the fan, motor or junction box.
5. Do not bend or kink the power wires.
6. Do not install where the air temperature will exceed 40°C (104°F).
7. This ventilating fan is approved for use over a bathtub or shower when installed in a GFCI protected circuit.

8. Do not use to exhaust hazardous or explosive vapors.
9. Do not install in a cooking area.
10. Use this unit in the manner intended by the manufacturer. If you have any questions please call the manufacturer. Customer service number located on last page.
11. Installation work must be carried out by qualified person(s) in accordance to all local and safety codes including the rules for fire-rated construction.
12. Sufficient air supply is required for proper combustion and the exhausting of gases through the chimney (flue) of fuel burning equipment to prevent back–drafting. See the standards of NFPA (National Fire Protection Association) and ASHRAE (American Society for Heating Refrigeration and Air Conditioning Engineers) and the local building code authorities.
13. Exercise care to not damage existing wiring when cutting or drilling into walls or ceilings.
14. Fans should always be vented to the exterior.
15. Do not use this fan with any solid state control device.
16. If this ventilating fan is installed over a tub or shower, it must be marked as approved for the application.
17. Prior to service or cleaning this unit, shut off power supply at the panel and lock to prevent the power from being turned on. If the panel cannot be locked clearly mark the panel with a warning tag not to turn on the power.
18. Do not install in a ceiling with insulation greater than R40.
19. Ductwork should be installed in a straight line with minimum bends.
20. Duct work size must be a minimum of the discharge and should not be reduced.

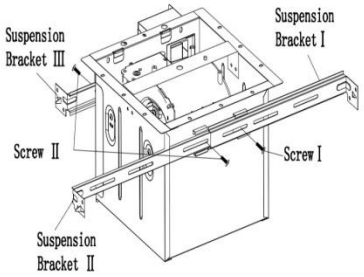

Fig. 1

WARNING:

Turn off electricity at breaker box before beginning installation.

INSTALLATION I (JOIST MOUNTING)

1. Insert the suspension bracket into the fan body and adaptor (select the suspension bracket as shown below). (Fig.1)

2. Install the suspension bracket to joists by using long screws (M4x30). (Fig.2)

3. Refer to wring diagram on page 4. Using wire nuts, connect house power wires to ventilating fan wires: black to black; white to white; green to green. Replace the junction box cover. (Fig.3)

CAUTION:
Mount junction box cover carefully so lead wires are not pinched.

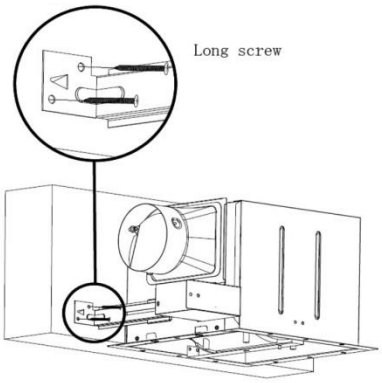

Fig. 2

4. Install a 4" circular duct and secure it with duct tape or clamps.
5. Mount grille to fan body and install the 2 GU 24, 13W bulbs. (Fig.4)
6. Mount glass shade to grille by using connect screw and finial. (Fig.5)
7. Turn on electricity at breaker box after finishing installation.

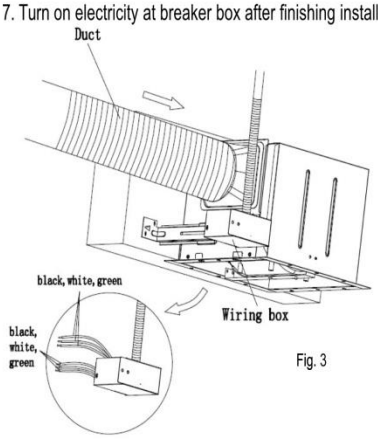

Fig. 3

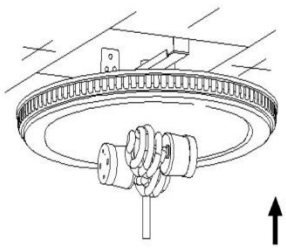
Fig.4

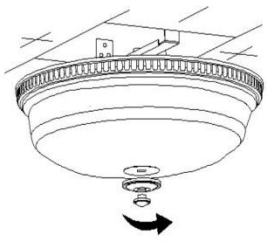
Fig.5

INSTALLATION II (IN EXISTING CONSTRUCTION)

1. Installation in existing construction.
   Installation the fan body in an existing building requires an accessible area (attic or crawl space) above the planned installation location or existing ducting and wring.

   (1) To install the fan body, follow the procedures described in installation I. Take the following precautions before installation.

CAUTION:
Check area above planning installation location to be sure that:
1. Duct work can be done and that are is sufficient for proper ventilation.
2. Wiring can be ran to the planned location.
3. No wiring or other obstructions shall interfere with installation.

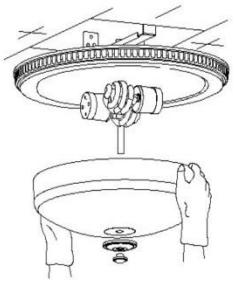

Fig. 6

(2) Inspect duct work and wiring before proceeding with installation.
(3) Plan suitable location for fan body. (next to ceiling joist)
(4) Before installation, provide inspection and maintenance access at a location that will not interfere with installation work shown in installation I.
(5) First, remove ceiling section.
(6) Install fan body.
(7) Continue from step 3-7 of installation I (page 5) to complete the installation work.

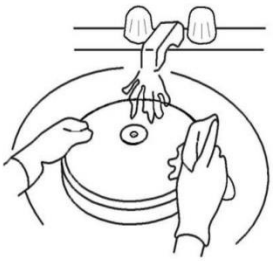

Fig. 7

2. Installation from accessible area above fan location.
   (1) Inspect duct work and wiring before proceeding with installation.
   (2) Remove ceiling section.
   (3) Install fan body.
   (4) Continue from step 3-7 of installation I (page 5) to complete the installation work.

MAINTENANCE

ELECTRICAL WARNING

Disconnect power supply before servicing. See General Safety (Page 4-5) in this manual before proceeding. Routine maintenance should be done at least once a year.

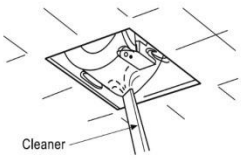

Fig. 8

CAUTION

- Never use benzene, thinner and any other such chemicals for cleaning the fan.
- Do not allow water to enter the motor.
- Do not immerse resin parts in water over 140 degrees Fahrenheit.

1. Unscrew finial to remove the glass shade. (Fig.6)
2. Wash and clean the glass shade in a sink and dry with a cloth. (Fig.7)
3. Remove dust and dirt from the fan housing with a vacuum cleaner. (Fig.8)
4. Dampen cloth with dish detergent and wipe the fan housing. Wipe dry with a cloth. (Fig.9)
5. Replace the glass shade.

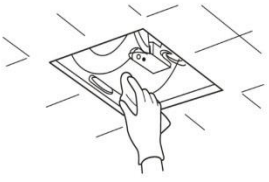

Fig. 9

WARRANTY

Tuscany bath fan model BPT14-24AL-1 / BPT14-24AL-2 is covered by a 2-year limited warranty. The manufacturer warrants the bath fan motor and all other parts/components on this bath fan present at the time of shipment from the factory to be free from defects in workmanship and material for 2 years after the date of purchase by the original purchaser, when properly installed and under normal conditions of use. To obtain warranty service you must register your product as noted below and provide a valid sales receipt of proof of purchase. This warranty does not cover products which have been abused, altered, damaged, misused, cot or worn. The manufacturer DISCLAIMS all other implied or express warranties including warranties of merchantability and or fitness for a particular purpose. As some states do not allow exclusions or limitations on an implied warranty, the above exclusions and limitations may not apply. This warranty five you specific rights and you may have other rights that vary from state to state.

THIS WARRANTY IS LIMITED TO REPAIR OR REPLACEMENT OF DEFECTIVE PARTS ONLY AND ANY COSTS RELATED WITH SAME SHALL NOT EXCEED THE USERS COST OF THE PRODUCT. MANUFACTURER ALSO RATAINS THE OPTION OF REFUNDING PURCHASE PRICE AS FULL SETTLEMENT OF ANY WARRANTY CLAIM.

Any changes related to installation, repair, replacement or damages related to same are excluded.

CUSTOMER SUPPORT

For customer support please contact us at 888-930-8528 or support@strategicretailsolutions.com.

PRODUCT REGISTRATION

Complete the registration card below and send it to our customer support team using any one of the following methods:

Email: support@strategicretailsolutions.com

Fax: 678-716-5692

Mail: Strategic Retail Solutions

Attn: Bath Fan Registration

PO Box 2086

Stillwater, MN 55082

Tuscany®

WARRANTY CARD

Name: _____

Address: _____

City: _____

State: _____ Zip: _____

Phone: (____) _____

Date of Purchase: _____

Purchased From:

Store Name: _____

City: _____

Item Information:

Color: _____

This registration card will be used for registering your purchase and for no other purpose.

Please Mail to: **Strategic Retail Solutions**

Attn: Bath Fan Registration

PO Box: 2086

Stillwater, MN 55082

© 2014 Distributed by:

Menard, Inc., Eau Claire,

WI 54703