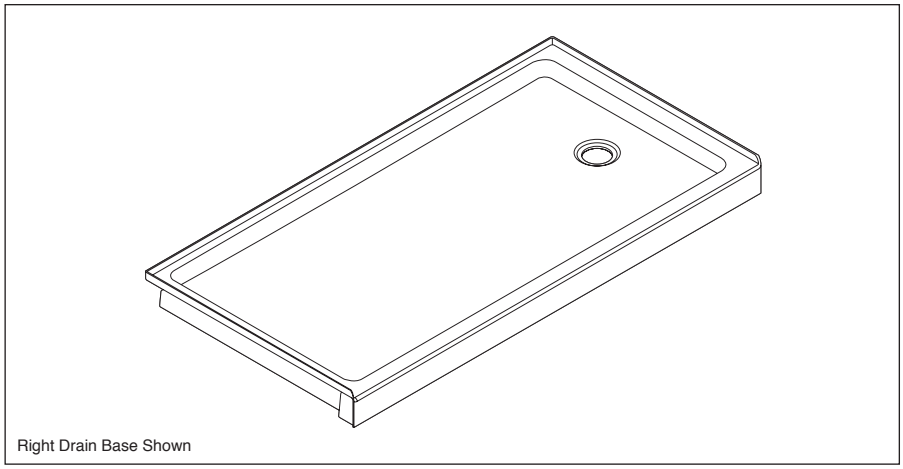

Right Drain Base Shown

see what Delta can do℠

HYCROFT ™

☐ **B78513-6030R-WH**

☐ **B78513-6030L-WH**

60" X 30"

Right Drain or Left Drain

Shower Base

- Made with High-Gloss ProCrylic™ Material
- Textured Bottom
- Uses Standard Shower Stall Drain with 4 1/4" Strainer
- 10 Year Limited Residential Warranty
- 1 Year Limited Commercial Warranty

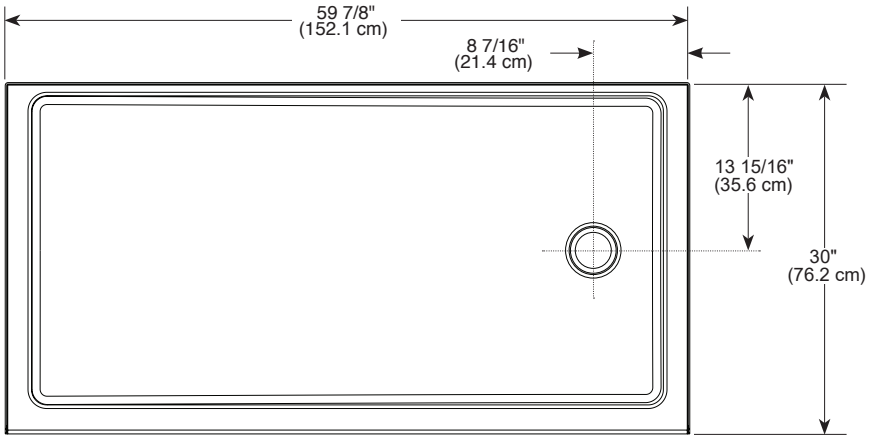

COLOR/FINISH

- White

COMPLIES WITH:

- CSA B45.5/IAPMO Z 124

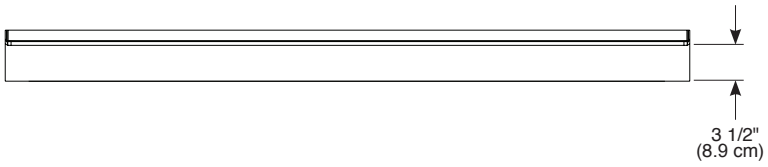

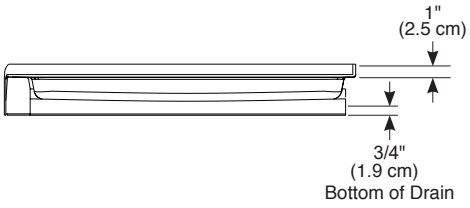

GREENGUARD GOLD

GREENGUARD certified products meet stringent indoor air quality standards, creating healthier indoor environments. Visit greenguard.org to learn more.

DSP-B-B78513-6030R-WH Rev. A
DSP-B-B78513-6030L-WH Rev. A

DELTA FAUCET COMPANY

55 E 111th Street, Indianapolis, Indiana 46280
350 South Edgeware Road, St. Thomas, ON N5P 4L1
© 2018 Masco Corporation of Indiana