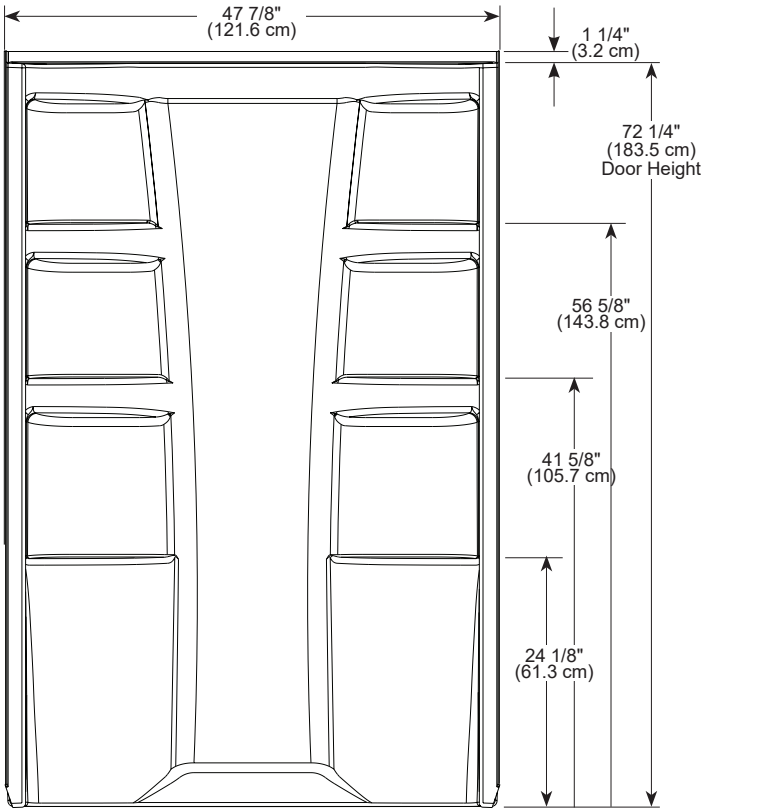

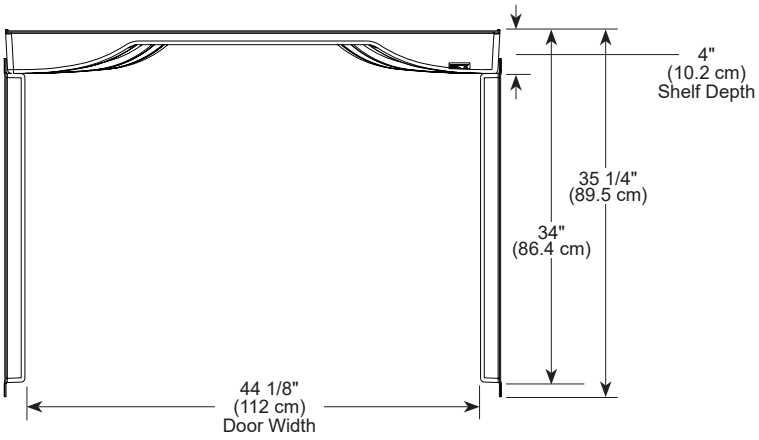

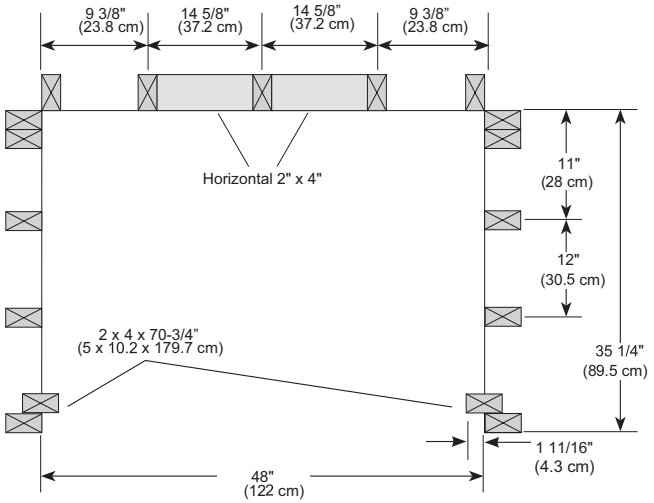

DELTA

see what Delta can do℠

HYCROFT™

B67513-4834-WH
48" X 34" THREE-PIECE
SHOWER WALL SET

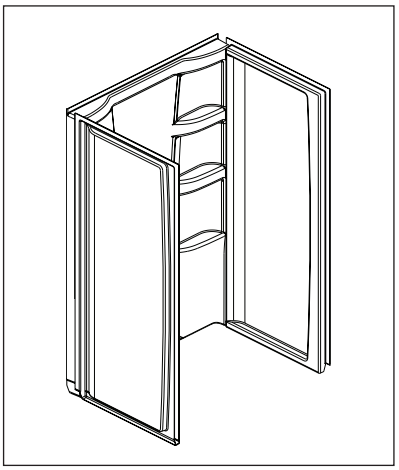

- Made with High-Gloss ProCrylic™ Material
- Direct-to-Stud Installation
- 10 Year Limited Residential Warranty
- 1 Year Limited Commercial Warranty

COLOR/FINISH

• White

COMPLIES WITH:

• CSA B45.5/IAPMO Z 124

GREENGUARD® Indoor Air Quality Certified

GREENGUARD certified products meet stringent indoor air quality standards, creating healthier indoor environments. Visit greenguard.org to learn more.

DSP-B-B67513-4834-WH Rev. A

DELTA FAUCET COMPANY

55 E 111th Street, Indianapolis, Indiana 46280
350 South Edgeware Road, St. Thomas, ON N5P 4L1
© 2018 Masco Corporation of Indiana