Shower Solutions USA, Inc.

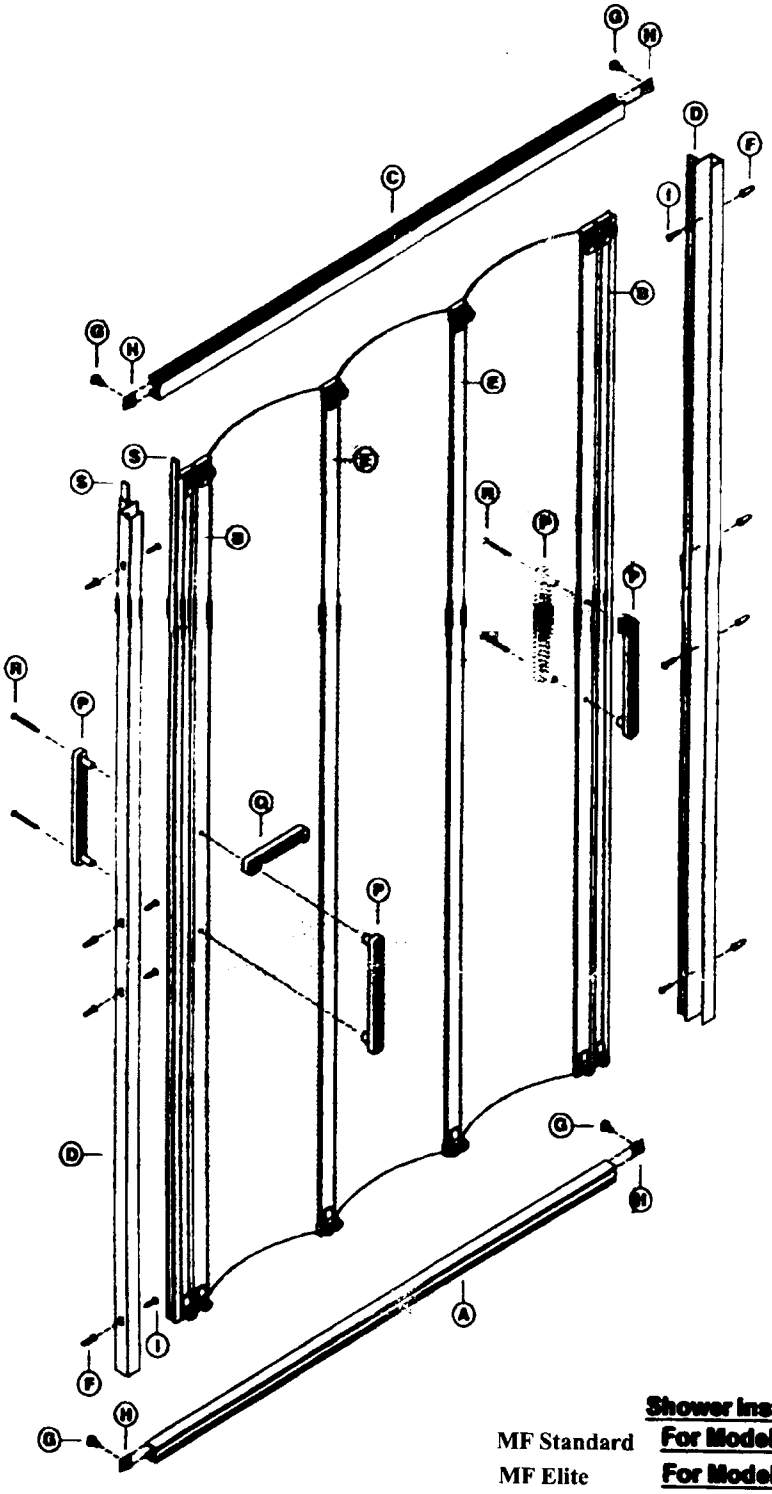

Shower Installation Instructions

MF Standard **For Model No. 2236 thru 2260**

MF Elite **For Model No.** 2344 thru 2360

STEP 1:

Begin by laying the entire contents of the unit on the floor to understand the design concept of the product. Note that top and bottom tracks (C & A) are identical in appearance and length and therefore interchangeable at this point. (see note in step 2).

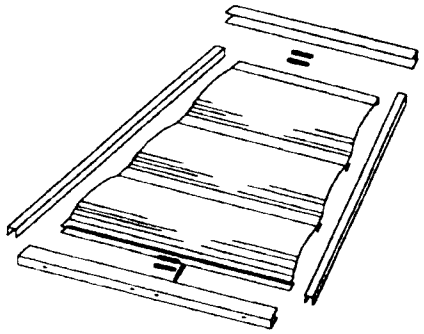

STEP 2:

Measure the opening width at tub level as shown. Cut the Bottom Track (A) to a 1/4" less than the measurement obtained and remove all burrs.

Note: *Once metal is cut, top and bottom tracks must be treated as separate and non-interchangeable pieces.*

Clean track of all metal shavings and lubricate the track's roller groove with petroleum jelly or silicone grease.

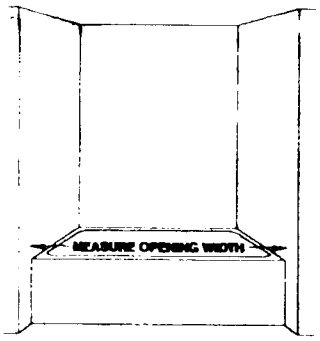

STEP 3:

Insert a spring nut (H) into each end of Bottom Track (A) (see fig. 3a & exploded view - sht 1) and position track on tub curb with it's opening toward interior (see fig 3b).

Insure that track is centered left to right and front to back. When satisfied that track is properly centered . . . temporarily tape track to curb and pencil mark it's position.

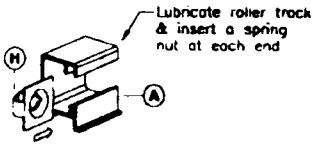

figure 3a

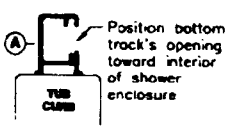

figure 3b

STEP 4:

With magnet receivers toward interior, set the Wall Jambs (D) over the ends of the Bottom Track (A).

Plumb the wall jambs, then make a pencil mark on the shower wall thru each of the Wall Jamb installation holes. Remove the Wall Jambs. With a 3/16" bit, drill 1" deep installation holes in the locations marked and insert Plastic Screw Anchors (F).

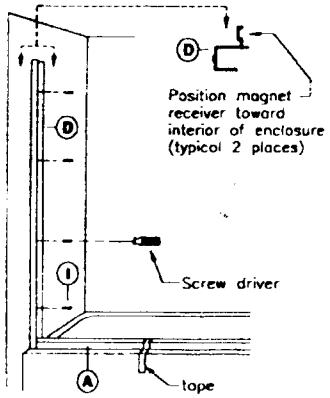

Insert Magnets (S) into the Wall Jambs' magnet receivers as shown below and crimp metal at bottom to keep magnets in place. Reposition Wall Jambs as before and secure to wall using #8 x 3/4" installation screws (I).

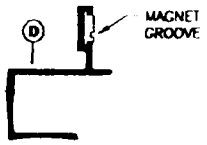

STEP 5:

Measure the opening width at top of Jambs as shown. Cut the Top Track (C) to a 1/4" less than the measurement obtained and remove all burrs.

Clean track of all metal shavings. Lubricate the track's roller groove with petroleum jelly or silicone grease.

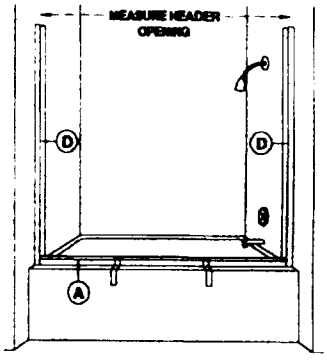

STEP 6:

Insert a spring nut (H) into each end of track (see fig.6 & exploded view - sht 1).

Position Top Track (C) atop jambs and secure track to jambs using two(2) 1420php installation Screws (G) as shown.

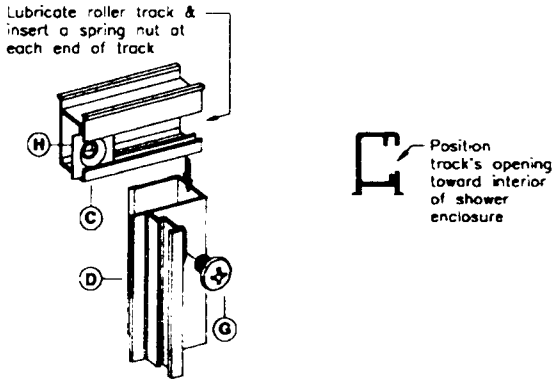

figure 6

STEP 7:

Depending on your configuration, notches may be located opposite of ends shown in figure below.

From inside of tub unit, take entire Door Assembly and insert the top rollers into the Top Track's entry notch (see fig. 7a).

Check to see that all rollers are properly aligned in groove (see figure 7b - side view).

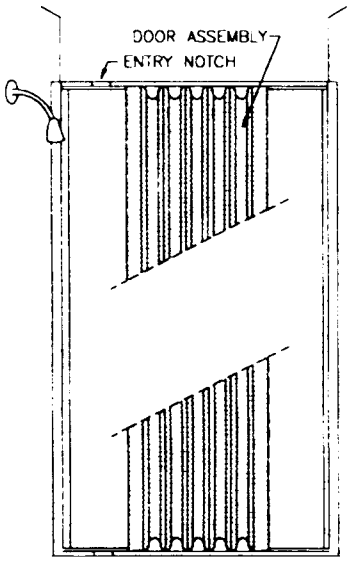

figure 7a
(Figure shows from inside of enclosure looking out)

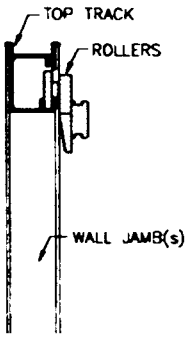

SIDE VIEW

figure 7b

STEP 8:

Install a Door Handle set (P) and the Door Latch (Q) on the left side of door assembly using Assembly Screws (R)(see figure below and exploded view - sht 1).

Install remaining Door Handle set (P) on the right side of door assembly.

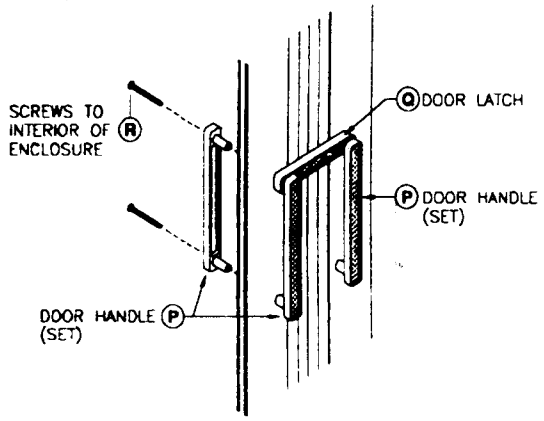

STEP 9:

To insure a leak proof installation, caulk interior and exterior of unit. Usa a clear silicone or rubber sealant.

STEP 10:

Latch the door completely open. Allow 24 hours for sealant to dry before using shower.

