Rubber Roof Installation Guide

Table of Contents

Page 2……General Information
Page 2……Cautions and Warnings
Page 4……..Recommended Tools
Page 4……..Available Products
Page 5……..Surface Preparation
Page 6……..Installation
Page 9……Pipe Penetrations
Page 9……..Roof Protrusion
Page 11……..Seaming Membrane
Page 13…….Perimeter Walls and Inside Corners
Page 15……Termination Bar
Page 16 ……..Outside Corner Detail
Page 17……Cover Strip
Page 17…….Rubber Pipe Boot with Steel Clamp
Page 18……..Pipe or Conduit Flashing with Flashing Tape
Page 19……T-Joints
Page 22…….Metal Edge Detail
Page 22……Cover Strip on Metal Edge Detail
Page 22…… Membrane to Shingle Transition
Page 23……Wood Decks
Page 24……..Repair of Rubber Roofing Membrane
Page 25.....Glossary
Page 28.....Review of Application Procedures
Page 30……Installation Details
Page 37…….Frequently Asked Questions

GENERAL INFORMATION

This User Guide aims to provide the User with an overview of the EPDM roofing line of products. This GUIDE is provided for informational purposes only and is not meant to cover every possible scenario.

In order to ensure a successful installation of EPDM roofing products, it is suggested to carefully read this guide.

A seamless and effective installation of EPDM roofing products may be accomplished by keeping in mind a few straightforward things not to do.

- Don't use solvent-based roofing cement on a rubber roof.
- In no circumstances may aluminum coatings be used.
- Never use Latex Adhesive for rubber-to-rubber seaming (splicing).
- When joining two rubber surfaces together, NEVER use Contact Adhesive from a five-gallon metal bucket - use Multi-Purpose or Seam Tape.
- Avoid permanently adhering the EPDM membrane to the flange of a metal drip edge.
- EPDM membrane should never be bonded on top of shingles.
- EPDM may only be adhered to after the contact adhesive or multi-purpose adhesive is completely dry to the touch.
- Seam Tape or Flashing Tape should never be used to replace Cover Tape.
- You should never install an EPDM roof using products that includes "ice and watershield."
- In no circumstances may Rubber Roofing Products be used for pond liners.

User Cautions and Warnings!

- Before using any sealants, primers, or adhesives, be sure to read the warning labels. These items are very explosive due to the presence of petroleum distillates. It's important to avoid open flames or fires. Do not smoke while using these items. The items in question have accompanying Safety Data Sheets (SDSs) via QR codes on each label that should be read carefully before use.

- The use of adhesives requires adequate ventilation. Don't breathe any vapors or gases in. Windows and fresh-air-intake ventilation fans should be kept closed to prevent fumes from entering the building.

- If possible, skin contact with adhesives should be avoided and appropriate safety gear and clothes should be worn.

- Keep the adhesives away from your eyes. Protective gear should be used, especially if there is any chance of contact with the eyes.

- Be sure to read the ladder manufacturer's warnings and set up a perimeter warning system using ropes and flags to prevent accidents. Wet or frosted surfaces might be a hazard. When working on a roof, it's best to do it with a friend and to avoid standing with your back to the edge.

- Fasteners that go through the deck should be used with caution to prevent damage to pipes and wires underneath.

- Avoid re-roofing over a wet substrate. Before new materials can be installed, all wet ones must be removed.

- Low temperatures (below 40 degrees Fahrenheit) and heavy humidity can cause adhesives to condense during application. Work should be halted if raindrops are found during installation until weather conditions improve. To proceed with the installation, put a new, thin layer of glue over the existing layer. Take note that all adhesives must be applied at temperatures over 40 °F.

- If you don't want your membrane to develop blisters, make sure the adhesives have enough time to dry (solvent-based adhesives only). Blistering will likely disappear with time, and the roof membrane will continue to function well. In the field, you may apply the Rubber Roofing Membrane to wet Latex Bonding Adhesive.

- For the warranty to apply, there must be positive drainage of at least one-eighth of an inch (1/8") per twelve inches (12").

- Rubber Roofing Products should never be used with anything solvent-based, including asphalt roof cement and coatings. Using such solvent-based products will deteriorate the EPDM membrane and Rubber Roofing Products.

It is important to know that the Bronco™ Rubber Membrane is compatible with adhesives and roofing products.

Tools Recommended

The following is a sample list to use as a guide, although specific tools and equipment may differ from one job to the next:

- 2-inch steel or hard rubber roller
- Scissors
- Chalk line
- Tape measure
- Solvent-resistant rubber gloves
- Stir stick for adhesives
- 9-inch paint roller frame and several solvent-compatible nap roller covers
- Caulk gun
- Screw gun and hammer drill

Products Available

- **Rubber Roofing Membrane** (45 mil thickness)
- **Latex Bonding Adhesive** in 1 gallon and 3.5 gallon containers (coverage rate 100 sq. ft./gal).
- **Contact Adhesive** in 5 gallon containers (coverage rate 60 sq. ft./gal)
- **Multi-Purpose Bonding Adhesive** in 1 gallon containers (coverage rate 60 sq. ft./gal).
- **Seam Primer** in 1 pint and 1 gallon containers.
- **Rubber Seam Repair Kit** *Contents include:* Primer (pint), seam tape (25'), scrub pad, and seam roller.
- **Rubber Patch Repair Kit** *Contents include:* Primer (pint), (4x) Patch Disks, scrub pad, and seam roller.
- **Tape Flashing** in 12" x 25' rolls.
- **Seam Tape** in rolls 3" wide in 50' lengths
- **Cover Tape** in rolls 5" wide by 50' long.
- **Black Lap Caulk** in 10 oz. tubes (20 lineal feet/tube).
- **Rubber Patch Disks** in a box of 4.
- **Rubber Pipe Boot and Steel Clamp** 1 per box
- **Aluminum Termination Bar** in 5' & 10' lengths.
- **Water Cut Off** in 10 oz. tubes (20 lineal feet/tube).
- **6" Reinforced Strip** in rolls 6" x 50'.
- **Patch Repair Kit** *Contents include:* **(**4) Round 8" patches, Primer (pint), scrub pad, seam roller
- **Fastening Screws (3") and Plates** in a box of 100 each.

ROOF SURFACE PREPARATION

Insulation boards that are compatible with our adhesives can be used with the Bronco™ Rubber Membrane (this does not include polystyrene insulation). The roof membrane is compatible with various substrates, including plywood, OSB (Oriented Strand Board), 1/2-inch high-density wood fiberboard, and concrete. High-density wood fiberboard, half an inch (1/2") in thickness, should be used to cover polystyrene insulation. Stagger the seams where the insulation boards meet. Filling up any gaps greater than 1/4" will make the surface homogeneous and smooth.

A minimum of ten (10) Fastening Screws and Plates on each 4' x 8' board of insulation and five (5) Fastening Screws and Plates on every 4' x 4' board, or as specified by the insulation manufacturer, must be installed. Every two square feet of perimeter insulation requires one (1) attaching screw and plate (16 per 4 ft. x 8 ft. board). Figure 1 displays several common configurations for fasteners.

It is important to note that additional fastening screws should be inserted around the roof deck's protrusions, such as pipes, chimneys, skylights, and irregularities.

Always avoid re-roofing over a wet substrate. Before any new materials can be installed, any that have been wet must be removed and replaced.

No moisture should be present on the roof. Blistering and poor membrane adherence are the results of moisture.

Loose debris, such as dirt and dust, should be removed from the roof surface.

A good drainage rate of at least 1/8 inch per 12 inches is recommended for roof surfaces.

Our 6"x 50' Reinforced Strip should be used at the foot of any parapet walls, transitions to sloping roofs, chimneys, skylights, etc., where the roof angle varies.

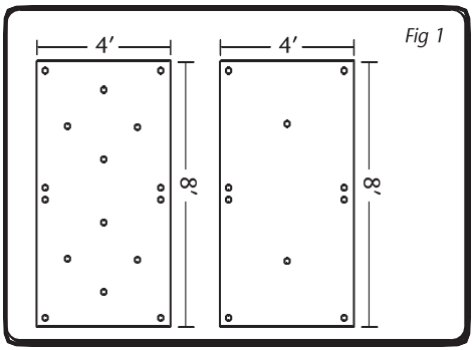

Fig 1

INSTALLATION

The Roofing Membrane should be unrolled over the substrate and smoothed down to the appropriate location. In the event that more than one membrane roll is necessary, each succeeding roll must overlap the one before it by at least four inches (4 ") for joining seams. It's important to make sure the membrane extends beyond the roof's edges by at least three inches (3").

Depending on the weather, the Rubber Roofing Membrane needs around 30 minutes to settle down.

It is best to fold the membrane in half lengthwise so that half of the membrane's underside is visible. Avoid getting wrinkles at all costs. Check out Fig. 2.

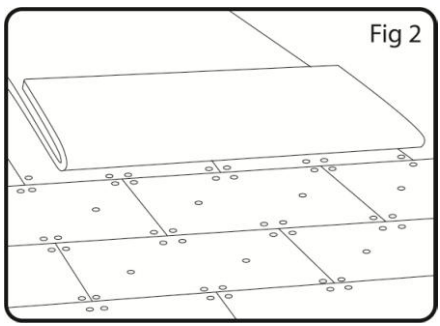
Fig 2

Contact Adhesive Application

Open the Contact Adhesive and mix it up well. Apply Contact Adhesive at a rate of sixty (60) square feet per gallon to both the substrate and the membrane by rolling it on using a roller that is authorized for use with solvents. Take extra care to keep the adhesive out of the joint(s) (See Figure 4). It's best to wait until the glue is sticky to the touch but not stringy (approximately 20 to 35 minutes). Next, roll the membrane into the bonded substrate while fluffing air gently under the upper part of the membrane. The membrane should be rolled starting in the center and working outwards. The membrane's edges MUST NOT roll in before the center. After the membrane has been put, a push broom should be used to press down on it to ensure proper contact.

Then, repeat the operation with the remaining unglued membrane section by folding it back.

Latex Bonding Adhesive

(May be applied in one of two methods)

Contact Application Method: Open the Latex Bonding Adhesive and mix it well. For every 100 square feet of combined substrate and membrane surface, one gallon of Latex Bonding Adhesive should be applied using a big nap roller. **Ensure the glue doesn't seep into the joints (See Figure 4).** The glue will remain a uniform hue when first applied but will clear up when it's ready to attach. The membrane is rolled into the adhesive substrate after the upper part is thoroughly fluffed with air. Roll the membrane from the center outwards (shown in Figure 3). The membrane's edges MUST NOT roll in before the center. After the membrane has been put, a push broom should be used to press down on it to ensure proper contact.

One-Sided Application Method: Open the Latex Bonding Adhesive and give it a good stir. Apply the Latex Bonding Adhesive at a rate of 100 square feet per gallon to **just the substrate** using a 3/4" large nap paint roller. After gently puffing air beneath the top half of the membrane, roll the membrane into the wet adhesive, beginning at the center and working your way out to the ends (shown in Figure 3, next page). When rolling out the membrane, MAKE SURE the edges don't get ahead of the center. Make sure the adhesive is transferred to the underside of the membrane by giving it a little sweeping to get rid of any air bubbles or wrinkles. Reduce the amount of time the membrane is

walked on while the glue is setting. Until the glue fully cures, the sheet has less strength. The membrane can be repositioned while the glue is still wet. After around 20 to 35 minutes, when the glue has started to build up, push down on it with a broom to make sure it makes excellent contact. This application necessitates a porous substrate, such as High-Density Fiberboard.

Repeat this technique with the remaining unglued membrane section by folding it back.

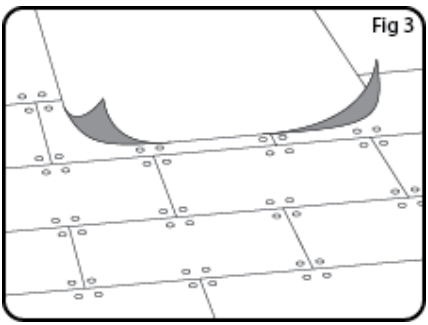

When using more than one roll, the membrane should be laid out such that water flows over the overlapped edges rather than under them. Be sure to provide at least a four-inch (4") overlap when putting in a new roll of membrane. Repeat this process until just half of the membrane's underside is shown. The same steps as with the first roll should be taken for the second, including applying Latex Bonding Adhesive to the substrate.

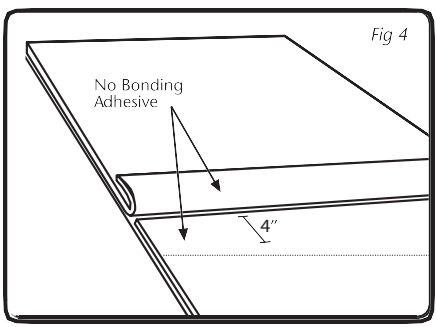

Multi-Purpose Adhesive

Both membrane-to-substrate and membrane-to-membrane seaming are possible with the Multi-Purpose Bonding Adhesive. Applying a thin glue application using a solvent-approved roller to the membrane and the substrate is required. After the glue has dried (become sticky), the membrane and the substrate may be brought into contact with one another. If you're joining two membranes together, you must prime the seam with and cover it with a 5" cover strip.

PIPE PENETRATIONS

If a pipe is in the way while laying out the field membrane, just roll the folded membrane up to it. Always make sure the membrane is flush with the roof's border, the wall, and the seams. It would be best if you made a clean cut from the pipe to the edge of the field seam that's closest to you (see Figure 5). Roll the membrane around the pipe after cutting a hole to fit its diameter. Ensure the membrane is positioned correctly. The membrane should be retracted before the adhesive is applied.

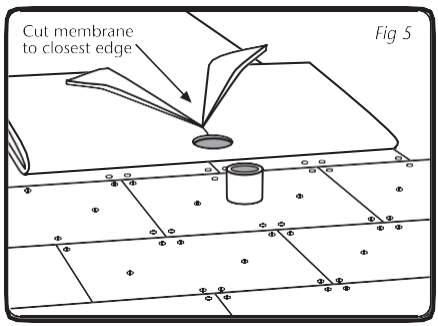

Fig 5

PROTRUSION IN THE ROOF

1. Unfold the folded membrane up to the curb (chimney, skylight, etc.) when putting down the field membrane, ensuring to keep the membrane straight and aligned with the walls and perimeter.

2. You can find out how high a curb is by measuring the distance from the middle of the curb's base to the very top of the

curb—Mark the folded membrane with the correct measurements after transferring them. The membrane should be slashed straight down from the marked edge. After that, angle cut the membrane from the mark to each curb detail corner. Please take note that a 45-degree angle should be used.

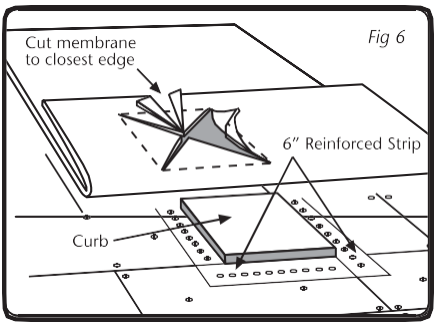

3. Install Fastening Screws and Plates every 12 inches, and then attach a 6" Reinforced Strip to the substrate. Ascertain that the 6 "The curb detail is butted to reinforced strip. All membrane surfaces, including the 6" Reinforced Strip, should be cleaned and primed and allow to dry.

4. Turn the membrane up on all four (4) sides as you roll the membrane around the curb, leaving a triangle of membrane behind. Use scissors to make a circular hole in the membrane at each corner where the angle changes (This will prevent the cut in the membrane from continuing).

5. When you've finished cutting and have the membrane in the right place, fold it back and start bonding. Use a multi-purpose adhesive to bond the 6" Reinforced strip, membrane folds, and sidewalk edge.

6. Begin rolling the membrane up the curb at the base or angle change (chimney, skylight, etc). Before rolling the membrane up the curb, ensure it firmly adheres to the angle change. Roll the smooth surface of the 6" Reinforced Strip with a steel or hard rubber roller. Rub the membrane down with a broom or your hands to make sure it sticks perfectly.

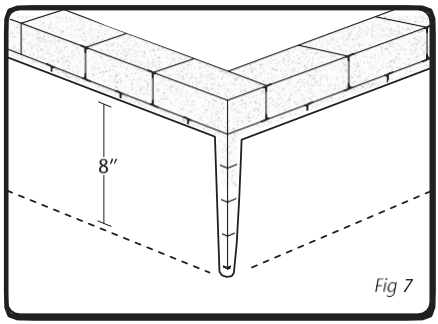

Fig 7

7. If the curb is less than eight inches high, the membrane must climb at least eight inches higher to reach the top of the aperture. See Figure 7.

SEAMING MEMBRANE

With a crayon, draw a line 1/2 inch (1/2") from the leading edge of the top membrane sheet every 3"-4" after attaching the membrane so that the width of the seam is the width of the 3" Seam Tape (shown in Figure 8). In this way, the seam tape may be placed properly.

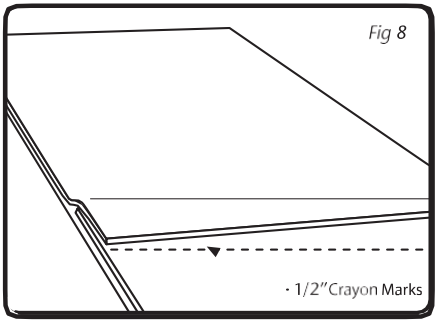

Fig 8

To reveal the seam, fold back the top membrane sheet. Tacking the membrane back is easy with the help of a little piece of seam tape with adhesive on both sides (HINT). Using the scrub pad in a circular motion while applying mild pressure, clean the area around the seams and prime them with Seam Primer. Continue until the surface of the seam appears smooth and black. Make

sure you prime all the way to the edge where the crayon marks are and then wait for that to dry. (see Figure 9).

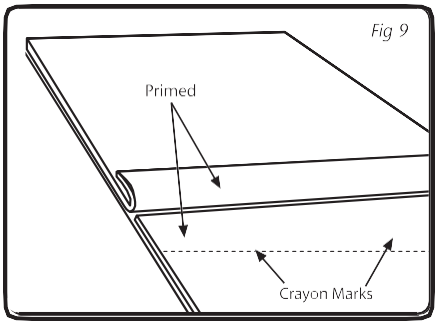

Align the tape side of the Seam Tape with the crayon markings and unroll it along the length of the seam. The Seam Tape is then rolled with a steel or hard rubber roller while the release paper is still attached. The Seam Tape will be secured in place, and trapped air will be released. The top membrane should be folded over the Seam Tape release paper (shown in Figure 10).

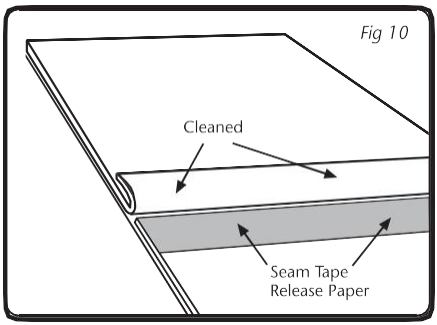

At a 45-degree angle to the seam, reach beneath the top layer of membrane and peel the release paper away from the Seam Tape. If you want to remove the paper without ripping the seam, you can do it by dragging your palm over the seam from the rear to the front. Fishmouths and other seam flaws can be avoided in this way. Once the paper is removed, roll the seam with a steel or hard rubber roller across and along its length to ensure a tight seal (Figure 10a).

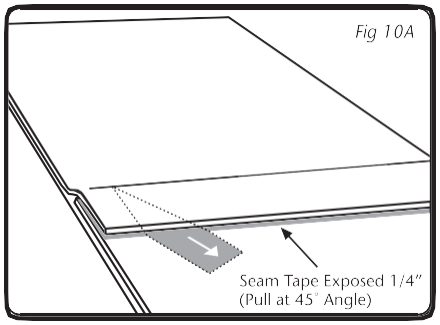

IMPORTANT! Seam Primer and Black Lap Caulk should be used to seal the leading seam edge if the Seam Tape does not obviously extend beyond it.

Please note that while joining Seam Tape, each piece must overlap the previous one by at least three inches (3") and be rolled firmly with a steel or hard rubber roller.

PERIMETER WALLS AND INSIDE CORNERS

6" Reinforced Strip with Fastening Screws and Plates should be installed to the substrate with a screw at every 12 inches (12"). Ascertain that the 6" butted to the parapet wall is a reinforced strip.

Using Multi-Purpose Bonding Adhesive, attach the 6 "membrane that has been folded, the wall area, and the reinforced strip. It is best to begin rolling the membrane up and along the wall at the base or angle change between the corner and opposite end of each wall. Squish the surplus membrane into the corner by rolling it. When rolling the membrane up the walls, it is important to ensure a secure adhesion before proceeding. Roll the flat surface of the 6" Reinforced Strip with a steel or hard rubber roller. Use a broom or your hands to massage the membrane down to achieve complete adherence.

WARNING: Make sure your wall flashings are a minimum of 12 inches in length above the level of the roof (shown in Figure 11).

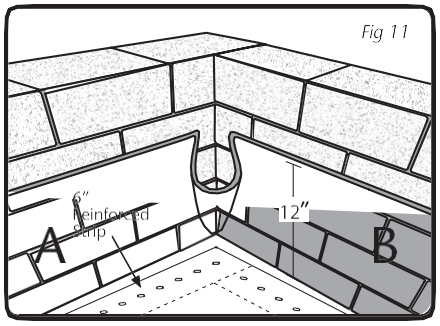

Once one side has been attached in step (A), work may begin in step (B). A pocket of extra material ought to form in the corner once both walls have been flashed in.

The "triangle" formed by the pocket's inside, and exterior should be cleaned and primed with Seam Primer before being coated with Multi-Purpose Bonding Adhesive (shown by the figures in Figure 11). Keep the glue wet until it becomes sticky to the touch, not stringy.

Wall flashing must adhere as closely as possible to both sides' corners.

Press the two bonded surfaces together, beginning at the bottom of the inner corner pocket. Use the Multi-Purpose Bonding Adhesive to attach the pocket to either wall (as indicated in Figure 11A). Put in place a strip of Flashing Tape, eight inches (8") wide, that runs the length of the pocket's fold from bottom to top. It would be best if you made sure that the Flashing Tape goes out four inches into the pocket and four inches onto the wall. Seal off all of the Flashing Tape's edges. Figure 12.

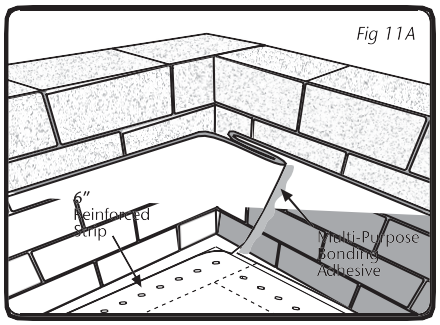

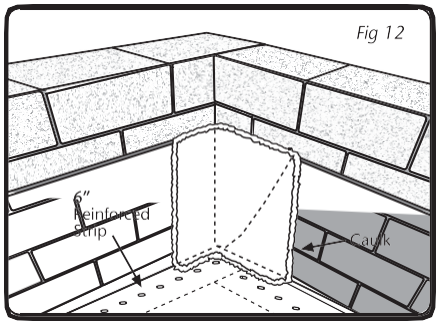

TERMINATION BAR

Find out where you'll put the Termination Bar and how high your final wall flashing will be (12 inches or less if the project site won't allow for that much). Water Stop should be applied in a thick bead between the membrane and the wall after the flashing has been peeled away from the top of the wall. The Termination Bar's ultimate location should be immediately above the Water Stop after its application.

Use the correct fasteners to secure the Termination Bar. Put a screw or bolt in each hole that was predrilled. Trim any membrane hanging over the Termination Bar's top and seal it with Black Lap Caulk.

OUTSIDE CORNER DETAIL

1. Seam Primer should be applied using the scrub pad to all flashing areas before they are flashed. The Flashing Tape should be cut to a size of twelve inches (12") by twelve inches (12"), or as large as necessary to cover the corner. Flashing Tape should be rounded at all of its edges. The flashing should be folded in half when the Primer has dry. With three inches (3") of overlap on one side of the corner and nine inches (9") on the other, align the Flashing Tape against the vertical surface. Flashing should be folded over corners and adhered to vertical surfaces. Before extending the flashing onto the flat roof surface, make sure there is excellent contact at the angle change. There should be an overhang of four inches (4") horizontally and eight inches (8") vertically from the flashing onto the roof surface. See Figure 13A.

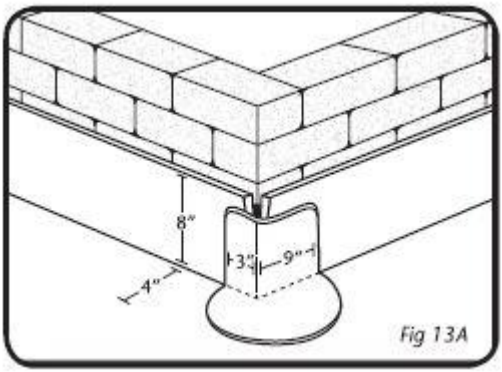

Fig 13A

IMPORTANT: It is important that the Tape used for flashing not be overstretched.

2. Put up another layer of Flashing Tape that measures twelve inches (12") by twelve inches (12") on top of the first, but this time, do it backward so that the nine-inch (9") half overlaps the three-inch (3") portion. Please refer to Figure 13B. There have to be at least eight inches (8") of vertical and four inches of horizontal extension from this patch onto the roof surface.

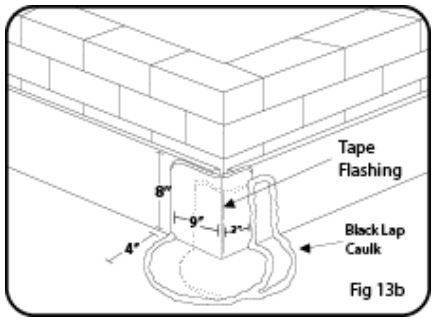

COVER STRIP

The Rubber Roofing Membrane was trimmed to the nearest edge whenever an obstruction was found during installation, such as a pipe or curb opening. Seam Primer should be scrubbed into all areas to be coated using a scrub pad after the field membrane has been bonded and turfed into place. Once the Primer has dried, the Cover Strip should be installed across the whole length of the pipe, and the resulting cut in the field membrane before the Pipe Boot is installed. See 14 Figure.

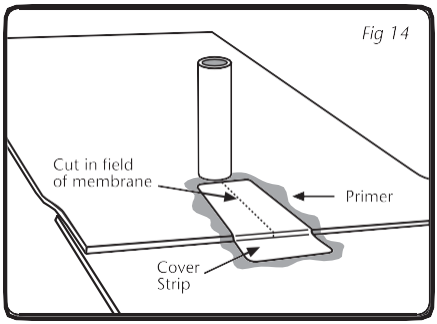

RUBBER PIPE BOOT WITH STEEL CLAMP

1. To get the right fit, you'll need to know the pipe's outside diameter so you can snip the pipe boot at the appropriate index ring. AVOID MAKING A STRAIGHT CUT THROUGH THE INDEX RING. In order to function properly, the Pipe Boot must have a close fit over the pipe.

2. Turn the Pipe Boot inside out to expose the bottom of the boot flange, then slip it over the pipe. Seam primer should be applied at a distance of at least ten inches (10") from the pipe in all directions. In order to attach the Pipe Boot to the field membrane, one must first pull the Pipe Boot down, remove the release paper from the Pipe Boot, and then glue the Pipe Boot to the field (shown in Figure 15). Apply pressure to the adhesive area using a steel or hard rubber roller.

3. Wrap the Pipe Boot with the included stainless steel adjustable clamp ring and secure it in place. Seal the top of the boot with caulk made of rubber.

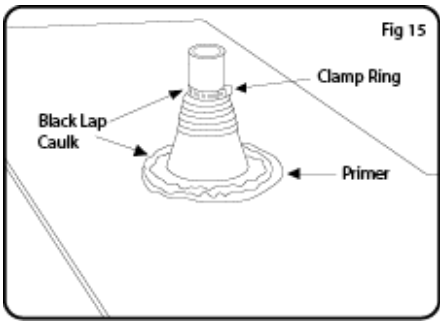

PIPE OR CONDUIT FLASHING WITH FLASHING TAPE

If a Pipe Boot can't be used to flash a protrusion, then two (2) layers of 12" Flashing Tape must be used.

1. Two (2) layers of 12" Flashing Tape must be applied to the protrusion when a pipe or conduit is present, but a Pipe Boot cannot be used.

Remove any flashings that have come loose, and make sure the protrusion is spotless. Rub in some seam primer and wait for it to dry before flashing.

2. Install a four-inch (4") length of Flashing Tape piece that extends two inches (2") up the protrusion and two inches (2") onto the roof deck. All of the protrusion should be wrapped with a two-inch gap; each flashing will overlap with the next.

3. The second layer should be taped in place using twelve inches (12") of Flashing Tape after the first layer is finished. Extend the Flashing Tape up the protrusion by nine inches (9) and down onto the deck by three inches (3"). Assemble the Flashing Tape such that the last laps are not immediately stacked on top of one other. As many components as are needed to create the desired flashing effect should be used.

In order to ensure that the new flashing is installed properly, it must always be extended ABOVE any existing flashings on the projection. All the flashing joints should be cleaned and sealed with Black Lap Caulk. Over the Flashing Tape, DO NOT affix a Pipe Boot Steel Clamp.

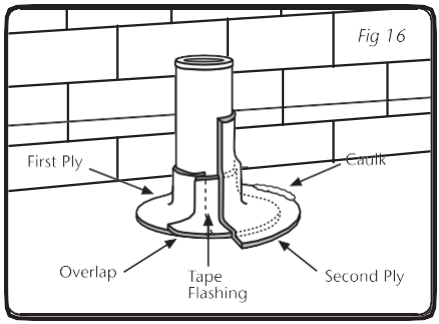

T-JOINTS

Membrane forms a T-Joint whenever a seam between two sheets goes beneath or over a third sheet. The intersection of the two upper layers forms a "T," with the middle layer terminating at its center. The T-Joint is a potential leak point since water may easily pass through it. The following procedure should be used when installing a T-Joint patch to ensure that this area remains problem-free:

1. Seam Primer should be used to clean the membrane at a distance of four inches (4") in all directions from the T-Joint, and then dried.

2. Flashing Tape should be trimmed such that it is three inches (3") longer and three inches (3") wider than the T-Joint.

Figure 17D demonstrates that a single T-Joint patch may be enlarged to fit several T-Joints (see page 21).

3. The backing should be peeled off, the Tape placed over the T-Joint, and a steel or hard rubber roller should be used to smooth it down.

4. Seal the T-Joint seams with Black Lap Caulk.

Where T-Joint Patches Are Required

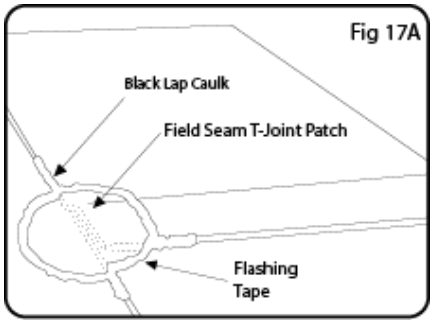

Where a Field Seam Travels Under a Wall Flashing.

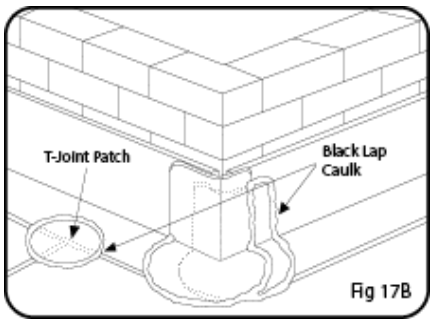

Field Seam at Vertical Change

When a field seam angles sharply (for example, when it turns up a wall or down over a perimeter edge), a strip of Flashing Tape six inches (6″) wide and twelve inches (12") long should be applied over the seam. If you're using Flashing Tape, you should round off the corners. Flash the region in the usual way, with half of the

flashing on either side of the spot that needs covering. The final step is to caulk all of the seams using rubber. As shown in Figure 17C.

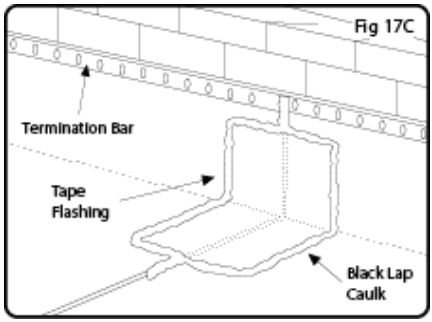

Where a Cover Strip Travels Under a Pipe Boot or Other Flashing.

IMPORTANT: T-JOINT REPAIRS ARE ALWAYS DONE WITH FLASHING TAPE. FOR THE BEST RESULTS, ROLL ALL T-JOINT PATCHES WITH A STEEL OR HARD RUBBER ROLLER.

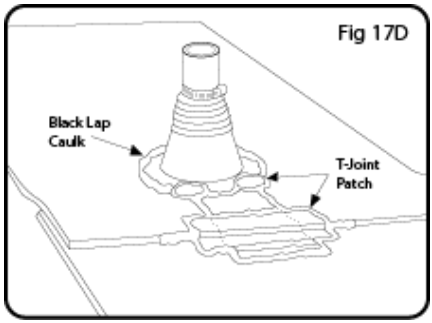

METAL EDGE DETAIL

Take care to attach the membrane all the way to the roof's edge. The membrane needs to extend at least three inches (3") past the ridge cap.

Nail the metal edging into place at 4–6 inch intervals, using nails no smaller than 3/4 inches in diameter.

COVER STRIP ON METAL EDGE DETAIL

It is recommended to use Seam Primer to clean the metal and membrane before applying the covering. Scrubbing the Primer along the metal edge back and forth with a scrub pad will ensure even coverage. To get the best results, prime an area larger than the Cover Strip. The Cover Strip should be attached after the Seam Primer has flashed off and should be placed half an inch (1/2") from the outside border of the metal edge. Use a steel or hard rubber roller to go over the whole Cover Strip. (see Figure 18)

Black Lap Caulk should be applied in a 1/4" bead along all of the seams where the Cover Strip meets.

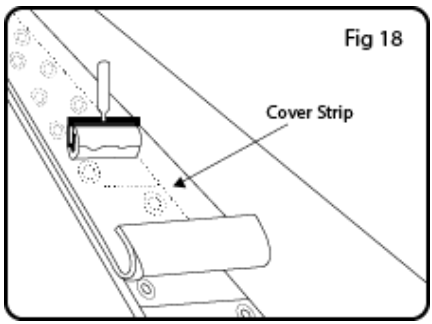

Allow for a minimum of four inches (4") of overlap when joining two pieces of Cover Strip. Install a six-inch (6") spacer after correctly rolling the whole Cover Strip and lashing a piece of Tape over any T-joints. Put some caulk around all the open seams.

MEMBRANE TO SHINGLE TRANSITION

It is recommended to remove three (3) courses of shingles prior to installing the Rubber Roofing Membrane system with a tie-in to an existing shingle roof.

Place adhesive along the roof's slope and attach the membrane. To install a bead of Waterstop between the membrane and the deck, peel back the top of the membrane. If you're using a membrane, nail the shingles on top of it every six inches (6"). Refer to Figure 19.

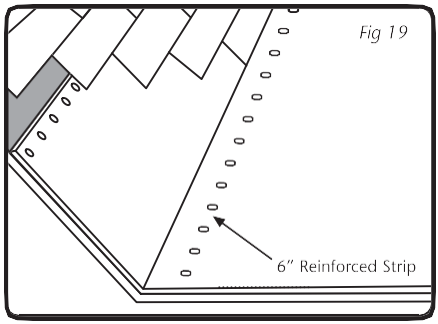

A minimum of four inches (4") should be left between the lowest course of shingles and the roof's angle change. The loose tabs on the bottom course of shingles may be secured to the membrane by lifting each tab, then running a bead of Black Lap Caulk down the tab's edge.

WOOD DECKS

IMPORTANT: IT'S IMPORTANT TO KEEP PEOPLE OFF THE MEMBRANE SINCE IT WASN'T MEANT TO BE A PERMANENT WALKING SURFACE.

Deck sleepers must be set over an additional EPDM membrane, known as a separator sheet when building a wooden deck over a roof covered with Rubber Roofing Membrane. The EPDM sheet used as a sleeper separator must be extended beyond the sleeper by at least two inches (2") on all sides. Please refer to Figure 20.

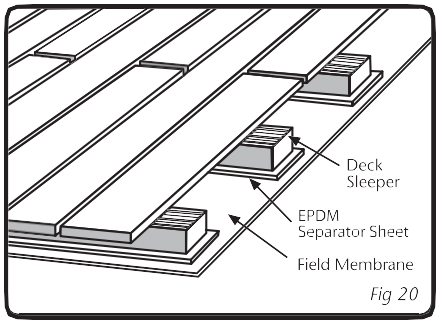

Fig 20

To avoid puncturing the Rubber Roofing Membrane, sleepers should not be attached directly to the membrane. A side wall, post, or surrounding area should be used to fasten the deck down. Use an outside carpet glue to secure outdoor carpeting, following the manufacturer's recommendations.

Note: You may find detailed instructions on flashing around pipes and conduits on page 17.

REPAIR OF RUBBER ROOFING MEMBRANE

Repairing a hole or tear in your Rubber Roofing Membrane is simple:

1. Seam Primer should be used to clean and prime the membrane for repair at a distance of at least four inches (4").

2. Cut a piece of Cover Strip three inches (3") bigger than the puncture or tear and round all corners once the priming has flashed off. Take the backing off and lay it over the hole.

3. Manually roll the whole Cover Strip with a steel or hard rubber roller.

4. Use Black Lap Caulk to cover any gaps around the edges.

RUBBER ROOFING MEMBRANE IS NOT COMPATIBLE WITH ASPHALT ROOF CEMENT.

Patch Kits can be purchased for use in making minor fixes.

GLOSSARY

BRIDGING: occurs if a junction or change in angle renders the membrane unsupported. Additional delamination may occur if condensation of moisture occurs at the membrane's base. Bridged areas need to be patched and reflashed.

CONTACT ADHESIVE: To attach the field membrane to the substrate, walls, and curbs, Contact Adhesive is employed. Before usage, it has to be thoroughly mixed. **(NOT FOR SEAMS).**

COVER STRIP: Cured EPDM membrane that is five inches (5") wide and has butyl tape bonded to one side. Makes it possible to strip in metal edge details and patch holes in the field membrane.

FASTENING SCREWS AND PLATES: Meant for mechanically fastening insulation boards to a roof deck.

TERMINATION BAR: Parapet walls, chimneys, skylights, and air conditioning curbs are all terminated with an extruded aluminum bar. If a metal drip edge is not employed, it is also used to connect the membrane to the fascia. It's important to use the right fastener in every hole and keep a one-quarter inch (1/4") gap between each pair of bars.

FISHMOUTH: Wrinkles arise when an increasing amount of membrane is squeezed into an inadequate space. A Fishmouth is a conical orifice generated by a wrinkle that culminates at a material's edge. Fishmouths and wrinkles in seams are unacceptable. The only option is to take them out and flash them in.

FLASHED OFF: By waiting until the adhesives' or Primer's solvents have evaporated, the material is left tacky rather than wet and stringy, ready to be bonded. Blisters will occur in the membrane if the correct Flash Off time is not observed.

LATEX BONDING ADHESIVE: The field membrane is bonded to the substrate using Latex Bonding Adhesive. Before usage, it's recommended to give it a good stir. **(Avoid Using For Seaming).**

METAL EDGE DETAIL: The purpose of this material is to give fascias and walls a more polished look and to stop water from dripping down them. The raw materials for the Metal Edge are steel and aluminum that have been galvanized or painted.

MULTI-PURPOSE BONDING ADHESIVE: The Multi-Purpose Bonding Adhesive is used to bond the field membrane to walls, metal, curbs, and rubber-to-rubber applications. Before usage, it is recommended to give it a good stir. When joining two membranes together, always prime with Seam Primer and cover the whole seam with a five-inch (5") Cover strip.

PIPE BOOT AND CLAMP: This is a Pre-molded EPDM boot and the least expensive approach to flashing pipe extensions. The pipe's top end is fastened to the Pipe Boot with the help of a stainless steel clamp.

BLACK LAP CAULK: Rubber Roofing Membrane requires this adhesive at the top of every application of a Termination Bar, at the top of Pipe Boots after the pipe boot clamp has been installed, at seams, on patches, in membrane flashings, and to adhere shingle tabs.

SEAM PRIMER: Solvent-based Primer is used to clean and prepare the Rubber Roofing Membrane before adding Seam Tape or any other cured or uncured product. Applied using a scrub pad. **The Primer should not be applied directly on the Tape**. Primers are only used to prep surfaces to receive tape products.

SEAM TAPE: Butyl tape is used to seal the gap between two membrane layers and is offered in a three-inch (3") width.

SIX (6") REINFORCED STRIP: 6-inch (6") wide strips of Reinforced Rubber Roofing membrane are used to fasten base flashings to walls and curba (and all angle changes).

SUBSTRATE: The surface that is covered by a membrane (brick, concrete block, high-density wood fiberboard, plywood, OSB, and isocyanurate insulation). As a precaution, EPDM rubber membranes shouldn't be installed over asphalt shingles or polystyrene insulation.

T-JOINT: A region where two pieces of Rubber Roofing Membrane meet and form a seam that continues beneath or over a third piece of the membrane. The "T" is made up of three layers, the middle two of which meet in the center and are connected to the top layer by a bridge.

FLASHING TAPE: Uncured EPDM membrane with adhesive tape utilized anytime the field sheet needs to be trimmed to fit exterior, corners, pipes, and T-Joint patches, and field seams requiring angle modifications. Following application, the

Flashing Tape will cure at the location of the application. Flashing Tape requires the application of seam primer on the membrane where it will be placed.

WATER CUT OFF: A waterproof compression gasket is formed when the Rubber Roofing Membrane is mechanically connected using a Termination Bar or Pipe Boot Steel Clamp. Applying Water Cut Off in the space between the membrane and the pipe or wall is common practice. The membrane is compressed, and a gasket is formed when the mechanical termination is fitted on top of it. All gasket seals at the drain clamping ring also rely on this material.

QUICK REVIEW OF APPLICATION PROCEDURES

1. SUBSTRATE

a. Plywood, OSB, or high-density wood fiberboard.
b. Concrete.
c. Insulation boards – polyisocyanurate.

2. INSULATION

a. All insulation seams are tightly butted together.
b. Correct fastener pattern and quantity used.
c. 100% adhesion of the membrane to the substrate.

3. FIELD SEAMS

a. The seam Primer should be visible beyond the field seams' leading edge.
b. A thorough inspection of the field seams revealed not a single wrinkle, hole, or fishmouth.
c. One sheet of Flashing Tape is used to cover all field seam angle variations.
d. The Tape used to seal a seam must reach past its starting point.

4. FLASHING DETAILS

a. The Flashing Tape does not bridge at any of the transitional angles.
b. When a Pipe Boot is not being used, all outside corners, pipes, and stacks must have two layers of Flashing Tape applied to them.
c. One layer of Flashing Tape is put over inside corner folds and at all T-Joints in the field seams.
d. Primers on seams can be seen beyond the flashing's leading edge, which is a definite drawback (over scrub).

5. TERMINATION BAR

a. Water Stop must be applied beneath the membrane before the Termination Bar is installed.
b. Insert a fastener into each hole, leaving a one-fourth inch (1/4 inch) gap spacing between the bars.
c. Termination bars are set in place on parapet walls at least twelve inches (12") apart over the rooftop deck.
d. Apply Black Lap Caulk to the top of the Termination Bar.

6. PENETRATIONS

a. Two layers of Flashing Tape are installed at least eight inches (8") above the roof deck.
b. Black Lap Caulk is used to seal the ends of pipe boots, which are fastened using steel pipe boot clamps.

7. METAL EDGE DETAIL

a. In order to endure wind uplift, Metal Edge has been prepared (cleaned with seam primer), and it is of suitable gauge and securely affixed.
b. Striped in properly utilizing five inches (5") in width Cover Strip. The required length of the cover strip is two inches (2"), regardless of the strength of any bolt or screw.

8. OVERALL APPEARANCE

a. Termination Bars are level.
b. The seams are all the same width and have been fully rolled in.
c. There is no garbage or mess left at the place.

NOTE: IMPRESSIVE OUTWARD PRESENCE IS ESSENTIAL.

Installation Detail

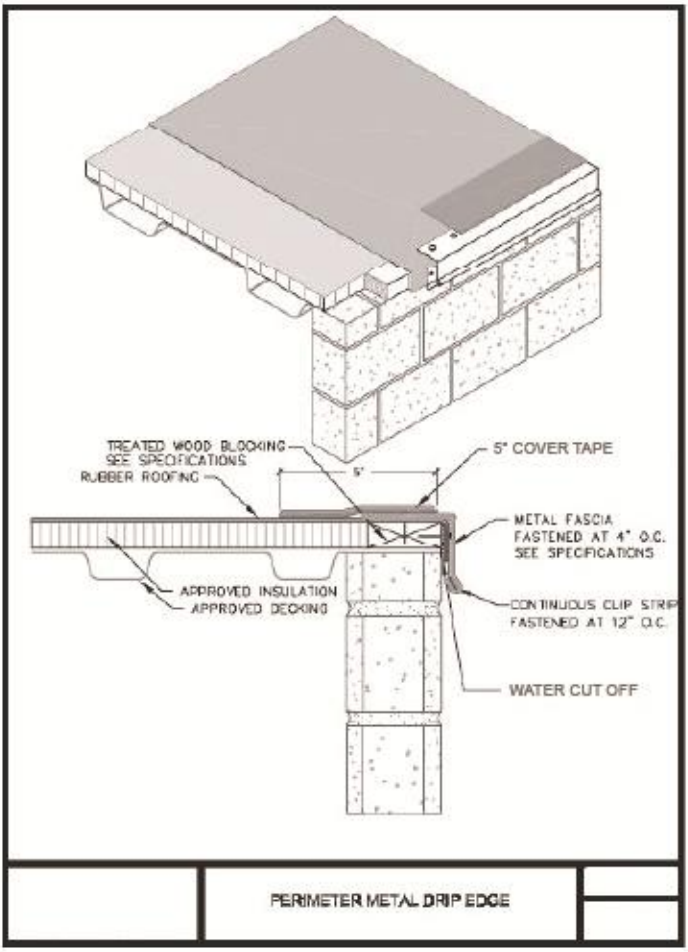

Installation Detail

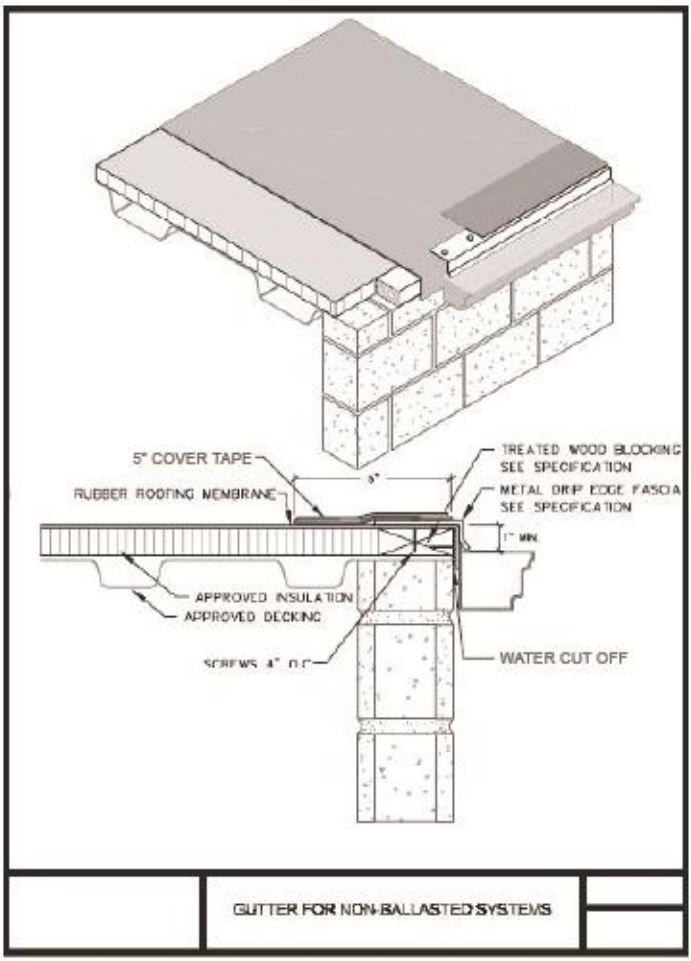

Installation Detail

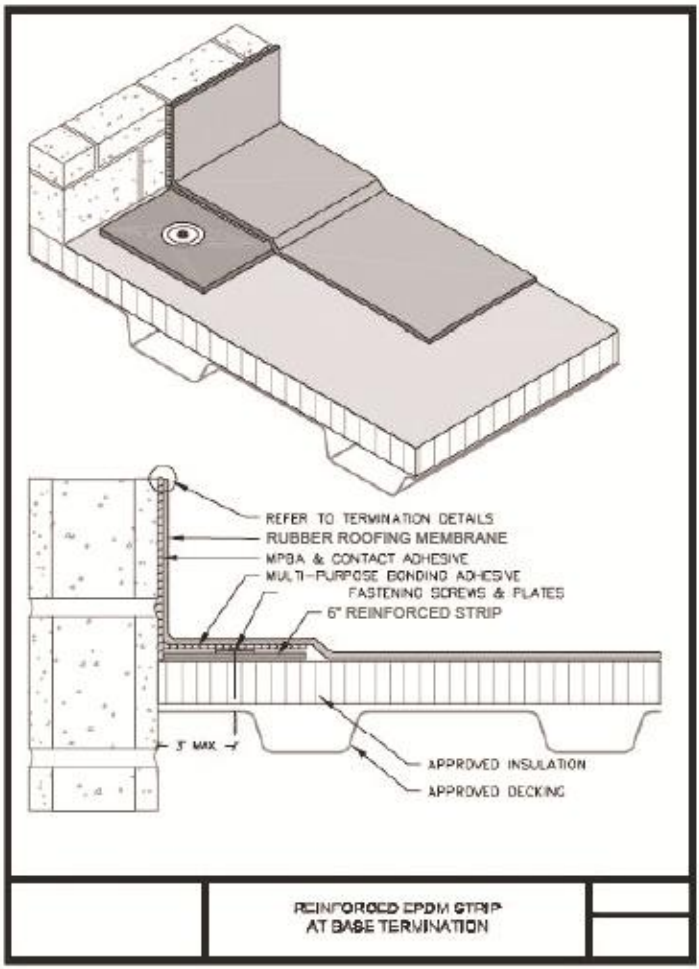

Installation Detail

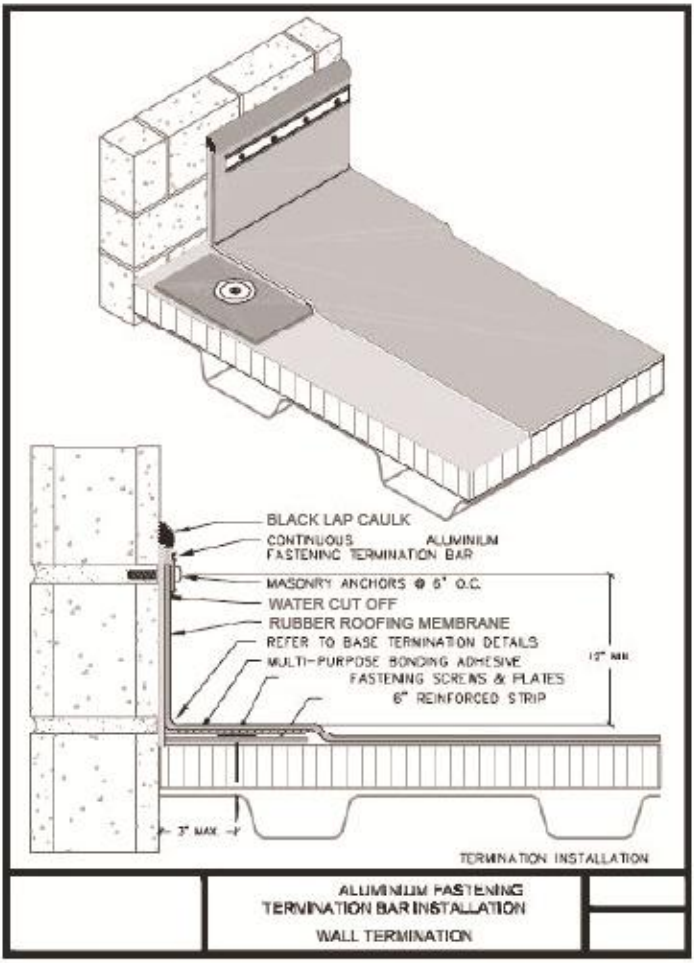

Installation Detail

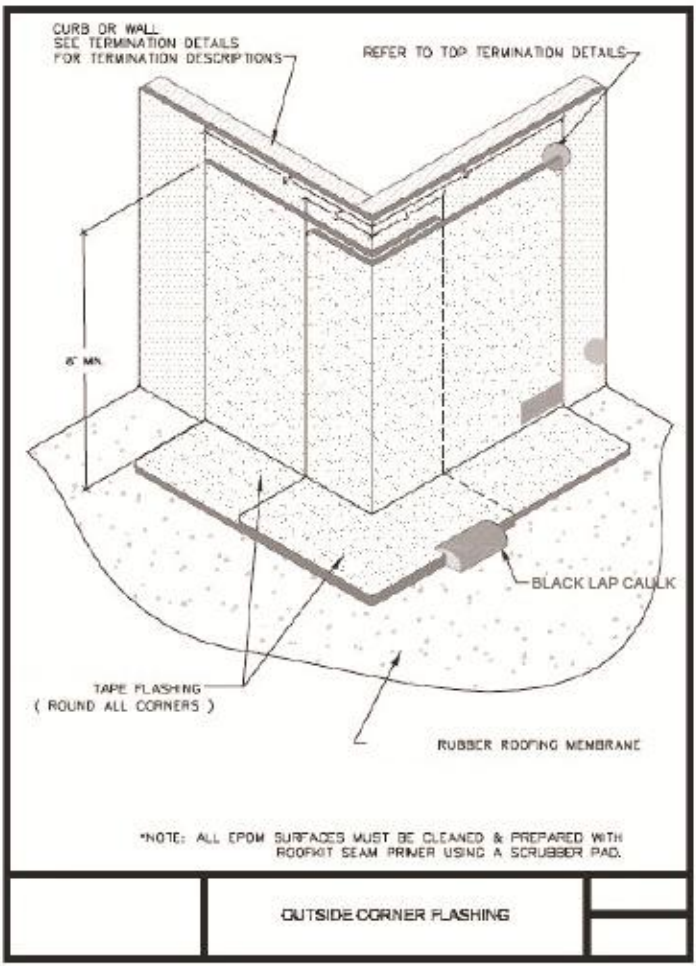

Installation Detail

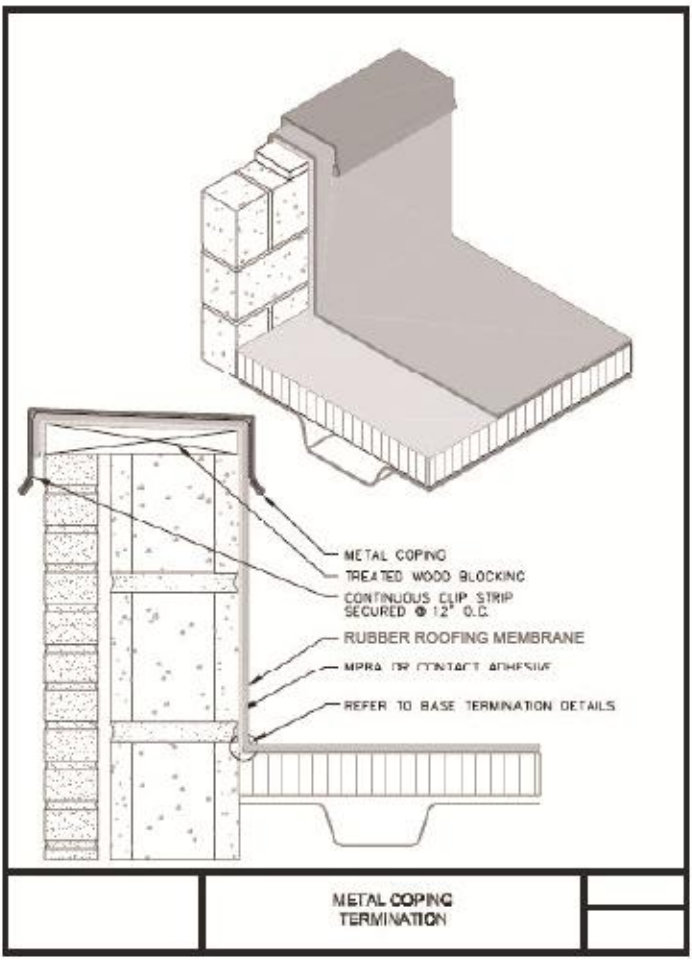

Installation Detail

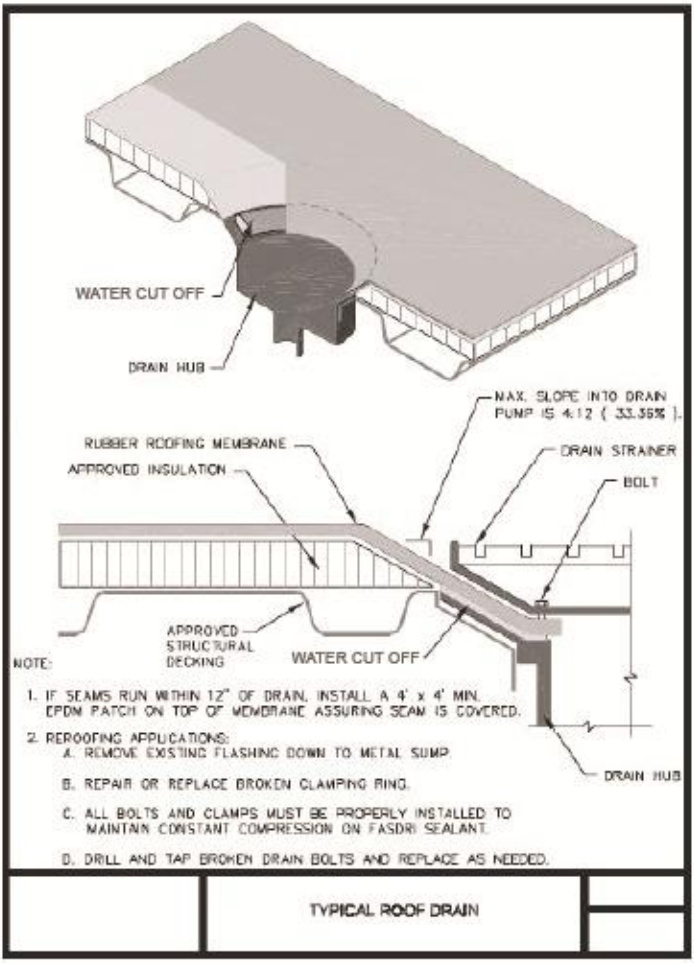

FREQUENTLY ASKED QUESTIONS

GENERAL

1. **How effective is the EPDM membrane as a pond liner?** The membrane is not suitable for use as a waterproofing membrane. Only use a fish-safe membrane, which may be ordered on demand.

2. **How big, thick, and heavy are EPDM membrane rolls?**

SIZE	*THICKNESS*	*WEIGHT*
10'x 20'	*45 mil*	*60 lbs.*
15' x 25'	*45 mil*	*113 lbs.*
10' x 50'	*45 mil*	*155 lbs.*
10' x 100'	*45 mil*	*310 lbs.*
20' x 50'	*45 mil*	*310 lbs.*
20' x 100'	*45 mil*	*620 lbs.*
10' x 50'	*60 mil*	*200 lbs.*
10' x 100'	*60 mil*	*400 lbs.*
20' x 50'	*60 mil*	*400 lbs.*
20' x 100'	*60 mil*	*800 lbs.*

3. **Could I get an EPDM membrane in a variety of colors?** Black is the sole color option for the membrane since it offers the highest level of protection from the sun and the longest lifespan

4. **What is the maximum allowable slope when installing an EPDM membrane?** Our Contact Adhesive or our Multi-Purpose Adhesive should be used for any slope higher than 2 inches per 12 pitch.

5. **Does the EPDM membrane degrade when exposed to ultraviolet (UV) light?** No. It can withstand the sun's rays for a long time without deteriorating due to its high UV resistance.

6. **Can I cover the EPDM membrane with an indoor/outdoor carpet?** Yes, the carpet maker should be contacted for guidance. It is important to keep in mind that using particular adhesives might compromise the EPDM membrane's durability or reduce its effectiveness.

7. **Can asphalt-based compounds harm the EPDM membrane?** Yes. There should be no contact between the membrane and asphalt-based materials such as roof cement, black jack, or similar products.

8. **In what ways does the manufacturer protect its customers?** The manufacturer assures you, the purchaser of its cured EPDM membrane ("Product"), and subsequent owners of the premises where the Product is placed that the Product is free of manufacturing faults and will not disintegrate prematurely due to weathering.

9. **How long do you expect the EPDM membrane to last?** The EPDM membrane has a standard ten-year warranty since it is made from the same high-quality material as our industrial-grade membrane.

10. **What's the summertime temperature range for the EPDM membrane?** Though it can get dangerously hot in the sun, the membrane maintains its waterproofing properties across a wide temperature range.

ROOF SUBSTRATES

11. **What type of roof insulation board should I use when installing a membrane?** Use industrial-quality roof insulation board, OSB board, or plywood.

12. **Where should I start if my roof deck is made of metal?** Roof insulation board at least 1" in thickness must be put on top of the metal deck. The insulation should be fastened to the deck using 10 screws and plates for every 4' x 8' board.

13. **Can I use felt paper as a base for the EPDM membrane, or must I use a separate membrane?** No. Whether you're building a new roof or replacing an old one, you should use high-quality, newly manufactured roofing insulation board, OSB board, or plywood.

14. **Do I need to remove the current roof before installing the EPDM membrane?** Yes, but you'll need

to replace your old roof with new commercial-grade OSB board, plywood, or insulation.

15. **What is the best way to attach the insulation board to the roof?** Install a minimum of 10 plates per 4' x 8' board using the supplied screws. To learn more, check out the Implementation Manual.

16. **If I wanted to use the EPDM membrane, could I do it directly on the plywood?** Yes, ensuring there are no sharp edges and the surface is dry and level.

17. **Can I use a roof insulation board with an EPDM membrane already in place?** This is not something you should do.

ADHESIVES

18. **If I want to attach the membrane to the roof, what kind of adhesives may I use?** Use a latex adhesive, such as the Bonding, Contact, or Multi-Purpose varieties.

19. **What type of adhesive is required for membrane-to-membrane applications?** Only make use of Multi-Purpose Adhesive.

20. **What is the proper way to use Latex Bonding Adhesive?** Use a big paint roller with a thick nap to spread Latex Bonding Adhesive across the surface. Apply enough adhesive so that the entire roof is coated. Roll the moist glue around the EPDM membrane. The membrane should be pushed into place using a push broom that has strong bristles. **Avoid getting Latex Bonding Adhesive on any metal.**

21. **When using Latex Bonding Adhesive, what is the recommended temperature?** All work must be done at temperatures above 40 degrees Fahrenheit, and the weather must remain pleasant for at least 72 hours after finishing

22. **What happens if the Latex Bonding Adhesive freezes?** This could compromise the adhesive's

integrity and reduce its effectiveness.

23. **What is the best way to use Multi-Purpose Bonding Adhesive?** You may use the Multi-Purpose Bonding Adhesive for anything on the roof, from gluing the membrane-to-substrate or membrane-to-membrane seaming. Using a paint roller with a slight nap, spread a thin coat of glue over the membrane and substrate. After the glue has become tacky, the membrane and substrate may be brought into contact. A scrub pad and Seam Primer are necessary for any treatment involving two membranes. With a three-inch paintbrush, spread the glue across both surfaces. After the glue has dried, you may join the two membranes.

24. **What is the proper method for applying Contact Adhesive?** Using a small-nap paint roller and Contact Adhesive, an EPDM membrane adheres to a substrate. After applying adhesive to both the membrane and the substrate and waiting for it to dry until it is sticky to the touch, the two surfaces can be brought into contact with one another.

25. **How long does it take the adhesive to dry or set up to the point where it is sticky to the touch?** Depending on the temperature and humidity, the drying time for Multi-Purpose and Contact Adhesives can range from 15 minutes to 30 minutes. In order to get the best results with Latex Adhesive, the membrane has to be put in place while it is still wet.

26. **In what way do I attach the EPDM membrane to the wall?** With a paint roller with a tiny nap, apply Multi-Purpose or Contact Adhesive to the wall and the membrane. Allow the glue to dry until it is sticky to the touch. The membrane must be placed in a contact position on the wall.

27. What are the container sizes and coverage rates for the adhesives?

Latex Bonding Adhesive:
1 gallon and 3.5 gallons, 100 sq. ft. per gallon Multi-Purpose Bonding Adhesive:
1 gallon, 60 sq. ft. per gallon
Contact Adhesive: 5 gallons, 60 sq. ft. per gallon

28. **Can I install EPDM membrane with wood glue?** To ensure a quality installation, only use Contact Adhesive, Multi-Purpose, or Latex Bonding Adhesive.

SEAMING

29. **In what way should I best finish seaming EPDM membrane?** The Rubber Seam Kit comes with thorough instructions on the box. For more, check out the user guide.

30. **In what ways does Cover Tape vary from one another? When would you utilize one over the other?**

Seam Tape (3" x 50') is used as the adhesive for the overlap of two sections of a membrane that will be seamed together. (For further info, check out the User Guide)

Flashing Tape (12" x 25') is ideal for protecting and sealing any surface with an uneven shape, such as around skylights, chimneys, or the junction of walls. Before applying the Flashing Tape, all membrane surfaces must be cleaned with Seam Primer and a scrub pad.

Cover Strip (5" x 50') is used to mask the Fastening Termination Bar or the flange of the edge metal feature on a low-slope roof. The metal flange's edge must be cleaned using a scrub pad must be used to clean the edge metal flange and 4" of the adjacent membrane before using the Cover Strip. (See User Guide)

INSTALLATION AND MAINTENANCE

31. **What tools are available to assist with the installation of the EPDM membrane?** There is both a printed manual and a video tutorial you can use to help with the setup.

32. **A EPDM system installation requires how many people?** The answer to this question will depend on the project's scope. However, having at least two individuals working on the task is strongly suggested.

33. **What is the purpose of the Termination Bar?** The membrane is attached to the wall and edge details using the Termination Bar. It is held together with screws (or masonry fasteners, if required).

34. **When it comes to sealing the roof's perimeter, what should I use?** You can use either a premade edge metal or the Termination Bar. (Check out the User Guide)

35. **How can I erect the edge metal feature around my roof's edge?** Edge metal should be installed after the membrane has been wrapped over the edge by at least 3 inches and after the flange has been secured to the roof deck at regular intervals of 4 inches to 6 inches using roofing nails of at least 3/4" in length. First, clean the edge metal and the surrounding 4 inches of the adjacent membrane with Seam Primer with a scrub pad. Use a seam roller to make sure the seams are making excellent contact.

36. **To what do I apply Black Lap Caulk?** A membrane seam, the edge of a flashing detail or patch, and the top edge of a Termination Bar and around the top of a Pipe Boot.

37. **I have a pipe vent on my roof; what should I do about it?** Protect your pipes with the Rubber Pipe Boot and Steel Clamp. Clean the membrane area around the pipe (at least 4 inches beyond where the Pipe Boot will go) using Seam Primer and a scrub pad. Cut the boot to size by laying it over the pipe (1" to 6"). Take off the protective backing and place the boot onto the roof. Roll the seams of the boot tight, fasten the top of the boot with the steel clamp, then caulk all of the seams and edges with Black Caulk.

38. **What should I do if the EPDM membrane has a significant tear or rip in it?** Make a patch out of Cover Tape to extend 3 inches beyond the tear, rounding the corners on the patch. In order to prepare the ripped area for a patch, you need to use Seam Primer and a scrub pad that is at least two inches broader all the way around than the patch itself. After the Primer has dried, remove the backing from the Cover Strip and press it firmly onto the primed area. Roll the seam with a seam roller to ensure good contact, and then use Black Lap Caulk to seal the seam.

39. **If I install an EPDM membrane, can I walk on it afterward?** Yes, but avoid ripping or puncturing the membrane with sharp things.

40. **If a wrinkle forms in the membrane when I'm installing it, how can I fix it?** A wrinkle may not be aesthetically pleasing, but it won't have any functional impact on the roof. An exception is if the hole is less than three inches from a seam, in which case it must be excavated and patched using a Cover Strip or a piece of membrane.

41. **How can I seal a hole bigger than the 5 "Trust Cover**

Strip? A spare piece of EPDM membrane should be cut into a patch the size of the hole, and the edges should be rounded. With Seam Primer and a scrub pad, clean the mating surface of the patch and the installed membrane a minimum of 4" larger than the hole. Using a paint roller with a short nap, apply Multi-Purpose Adhesive to the patch and the area around the hole. After the patch has dried to a sticky touch, lay it over the hole and roll the whole patch using a seam roller. Cover the border of the rubber patch with a 5" Cover Strip. Use Black Lap Caulk to seal any overlaps and a distance of three inches around each junction in the Cover Tape.

42. **How often do I need to replace the EPDM membrane in my new system?** At least twice a year, be sure to check on your roof to make sure it's clear of any buildup in the gutters, drains, or on the roof itself.