Heavy Duty Steel Shelving

MODEL NUMBER

ZRHP4824SVL5

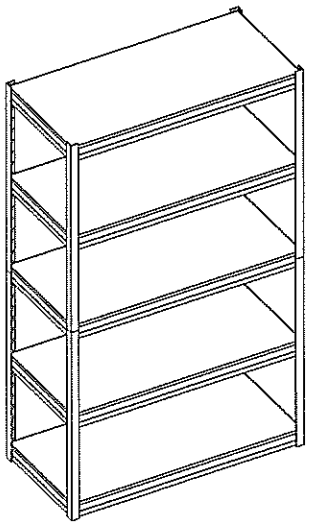

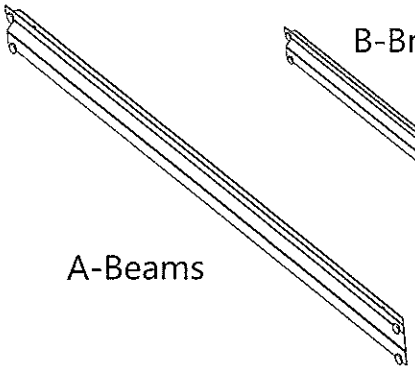

A-Beams

B-Braces

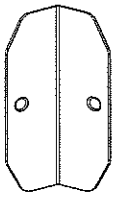

E-Post Coupler

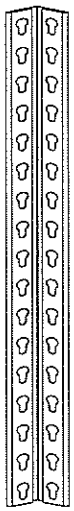

C-Post

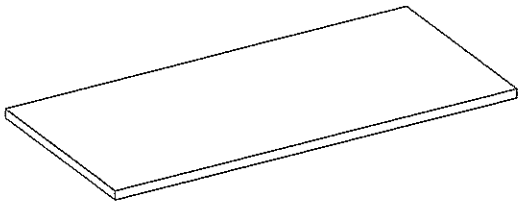

D-Shelf

ZRHP4824SVL5 5 Shelf - 72" h x 24" d x 48" w			
Description	Qty.	Part Number	Part Size
A-Beams	10	RCMBE4703	46 7/8"
B-Braces	10	RCMBE2303	22 7/8"
C-Post	8	RCPT3605	36"
D-Shelf	5	RLM22448	47 29/32"
E-Coupler	4	RMPC0409	5"

Safety Instructions

These units should be placed on a level surface.Failure to do so can result in poor product performance or create a possible safely hazard .this unit should be securely anchored to a wall or floor with suitable fasteners,which are not included.Do not use this unit for anything other than the manufactures intended purpose.DO NOT STAND ON ANY PART OF THE UNIT,OR USE IT AS A LADDER.Evenly distribute the weight on each level and always keep the heavier loads on the bottom.USE care when working with metal parts.

General Instruction

Assembly is done with the rivets of the beams and braces fitting into the slots of the post.A rubber mallet may be used on the beams and braces to seat the rivets properly.A hammer can alse be used,providing one use a cloth or a block of wood between the hammer head and the parts to prevent damage.Tap gently and be sure the rivets are straight and fully engaged.

Should you have any comments,damage,missing parts,or problems with assembly of this unit please feel free to contact our Edsal manufacturing facility at, (773)475-3137 and request customer service.We can also be reached on the internet at the following email address: service@edsal.com.

To obtain replacement parts,please provide the following information:

-Model # - Part # & Description - Location Purchased - Date Purchased

Assembly Instructions for ZRHP4824SVL5

Step 1

Figure B

Note:
Post are directional
The slot must point down

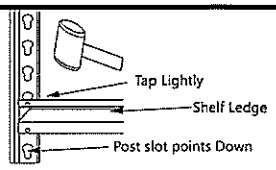

Figure A

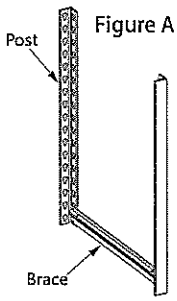

Figure C

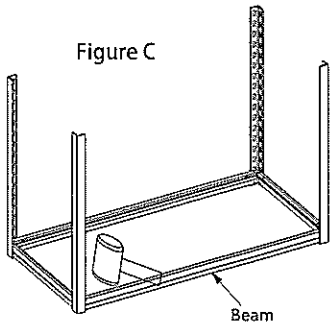

Assemble two(2)posts with one(1)brace.Skipping one slot from the bottom of the post (see figure A),place the rivets into post with the slot pointing down,and the shelf ledge of facing up (see the figure B).Tap lightly to seat rivets.Repeat with two (2) posts and one (1) brace. Assemble the two (2) posts units with two (2) beams (see figure C) .Skip one hole from the bottom of post,tap lightly to seat rivets.

Step 3

Note:
Post are directional .The slot must point down

Figure F

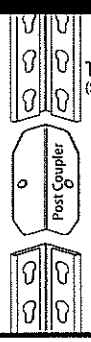

Figure G

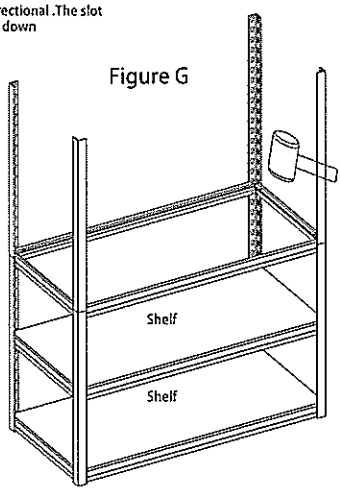

Add a shelf to the second level.Assemble top post to bottom post using post couplers.Place couplers into top&bottom opening of posts,tap down so that edges of posts seat together(see figure F).Continue by adding the third level of beams and braces with shelf ledge facing up (see figue G).Tap lightly to seat rivets.

IMPORTANT NOTE:Make sure all rivets are fully seated into the post slots.

Step 2

Figure D
Option A

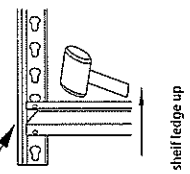

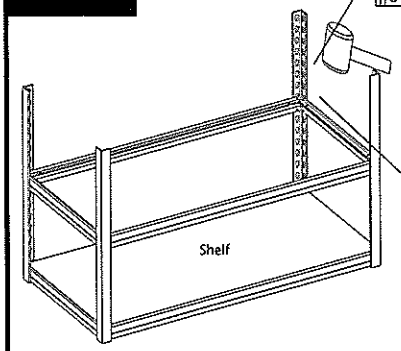

Figure E
Option B

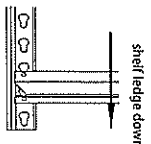

Add a shelf to the first level.Continue by adding the beams and braces to the second level.

OPTION A: install two (2) beams and two (2) braces in the post slots with the shelf ledge facing up (see figure D).

OR

OPTION B: install two (2) beams and two (2) braces with shelf ledge facing down.Tap lightly to seat rivets (see figure E).

Step 4

Figure H
Option A

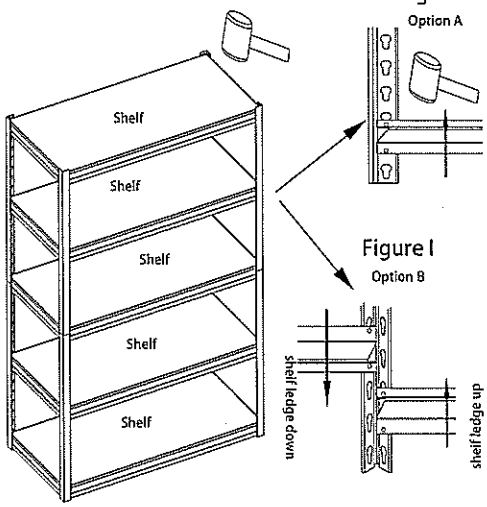

Figure I
Option B

Add a shelf to the third levels.Continue by adding the beams and braces the fourth level.Tap lightly to seat rivets.

OPTION A: install two (2) beams and two (2) braces in the post slots with the shelf ledge facing up (see figure H).

OR

OPTION B: install one (1) beam and two (2) braces with shelf ledge facing down to create the back and sides.Install front beam shelf ledge up.Place top rivet even with the bottom rivet of side braces (see figure I).

Add final level with shelf ledges facing up.Tap lightly to seat rivets.Add the final two (2) shelves to complete assembly.