SKU Number: 343-4218

Low Voltage LED Spot Light

Model Number: LV24010

Questions, problems, missing parts?
Before returning to your retailer, call our customer service at 1-800-887-6326.
Monday – Friday 9:00 a.m. – 5:00 p.m. CST

PACKAGE CONTENTS

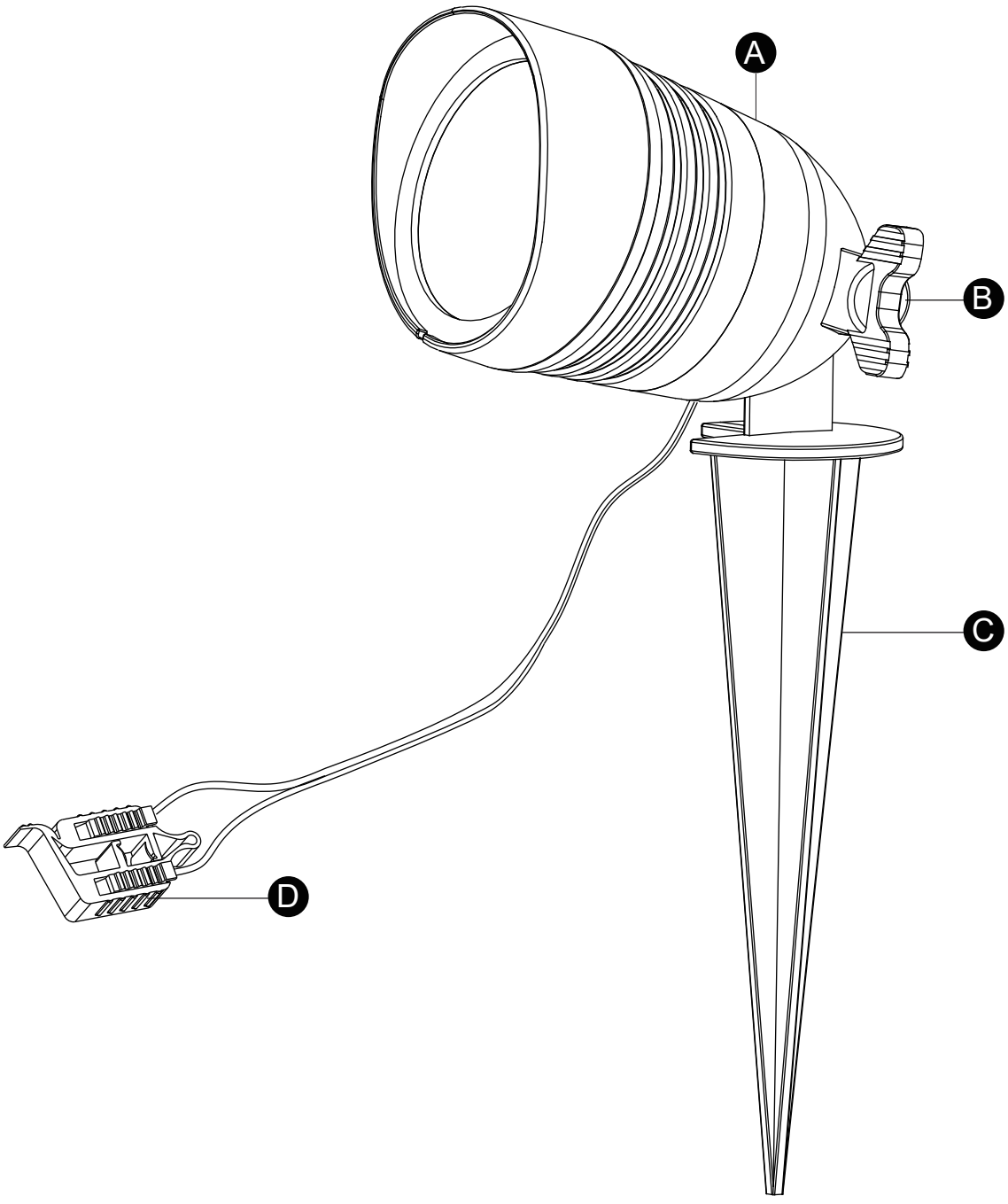

⚠ SAFETY INFORMATION

Please read and understand this entire manual before attempting to assemble, operate or install the product.

WARNING

- Risk of fire or electrical shock. Turn off power before assembly. Read all of these instructions thoroughly before use. Keep this instruction manual in a safe place for future reference.
- Do not install or connect wires with wet hands.
- Do not install this product within 10 feet (3 meters) away from a pool, spa, fountain, or other body of water.
- The main cable is intended for shallow burial - maximum depth must not exceed 6 inches (15.2 cm).
- For low voltage landscape lighting systems only.
- Do not step on, or drive over the main cable.

CAUTION

- This lighting fixture is only suitable for a 12V power supply.
- This light is a highly efficient, extremely low wattage, energy saving product.
- Use shielded cable for outdoor use in the following sizes: 18 AWG, 16 AWG, 14 AWG, 12 AWG.
- Do not submerge in water.
- Do not repair or modify this product.
- The maximum power of the LED module is 5W.

PREPARATION

Before beginning assembly, installation or operation of product, make sure all parts are present. Compare parts with package contents list and diagram on previous page. If any part is missing or damaged, do not attempt to assemble, install or operate the product. Contact customer service for replacement parts.

Tools Required for Assembly (not included): Silicone or Liquid Electrical Tape.

ASSEMBLY INSTRUCTIONS

Fixture installation

Fixture Assembly

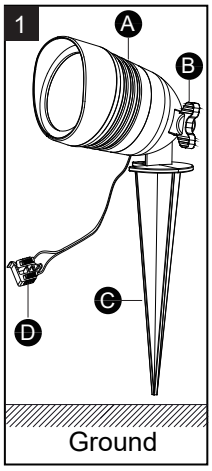

1. The lamp body (A) can be rotated up and down by adjusting the adjustable knob (B). Gently insert the ground stake (C) into the ground. (Fig.1)

   Note: In compacted, clay, or hard soils, moisten the ground with water before inserting the stake into the ground to avoid breakage.

Quick Connector

The connector (D) is intended for use with 18 AWG, 16 AWG, 14 AWG or 12 AWG outdoor cables.

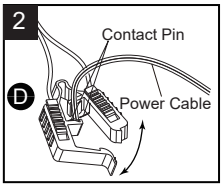

2. Open the connector (D) from the fixture wires and insert the power cable from the transformer (not included) into the connector (D). (Fig.2)

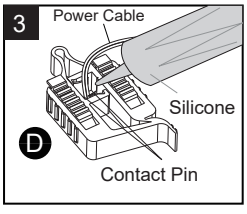

3. Align the power cable with the contact pins inside the connector (D) and close the connector (D), make sure the contact pins pierce the power cable and can be energized. (Fig.3)

   Note: If the connector needs better waterproofing, can use the silicone caulk compound or liquid electrical tape (not included) to caulk completely around the contact pins to prevent water from seeping into the contact pins. It's best to bury the cable in soil.

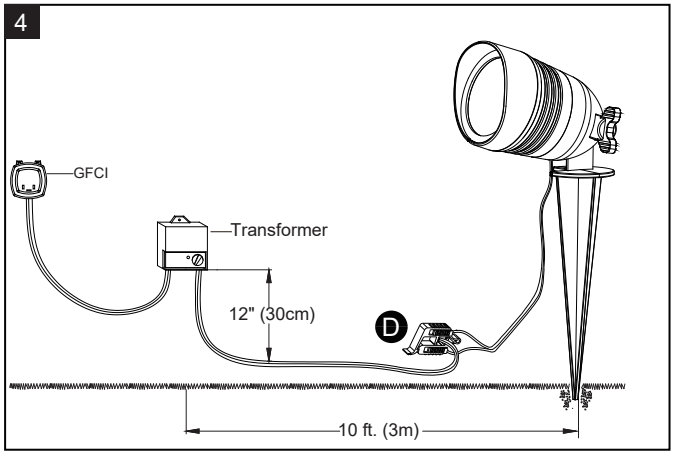

4. To ensure uniform brightness the first fixture should be a minimum of 10 feet (3 meters) from the transformer (not included). (Fig.4)

5. **Use the push switch to select the light working mode according to your preference.**
   9 working modes:
   - Soft white
   - Mixed white light
   - Red
   - Green
   - Blue
   - Yellow
   - Purple
   - All color cycles
   - All color cycles with breathing lights

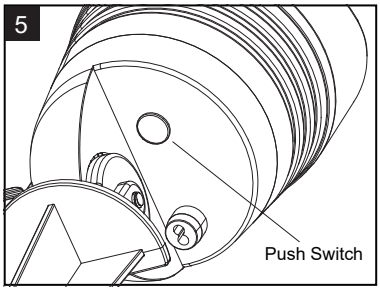

Press and hold for 3 seconds to close.

Caution:

a. The included connector is to be used only on low voltage power cable with 18 AWG, 16 AWG, 14 AWG or 12 AWG cable.

b. The fixture's cable and connector shall:
   - Be protected by routing in close proximity to the light fixture, or next to a building structure such as a house or deck.
   - Not be buried except for a maximum 6 inches (15.2 cm) to connect to the main low voltage cable.
   - Have a length such that the connector is within 6 inches (15.2 cm) from the light fixture or a building structure.

c. Do not use cable smaller than listed in chart below.

SELECT CABLE. Use the chart below to determine the MINIMUM gauge cable to be used, depending on the wattage of the power pack. Using a larger cable will ensure maximum light output.

Power Pack Wattage	Minimum Gauge Cable
240-300	12
120-240	14-12
60-120	16-14-12
0-60	18-16-14-12

CARE AND MAINTENANCE

Clean the glass and coated metal surfaces with a non-abrasive cleaner. Do not use any cleaners with chemicals, solvents or harsh abrasives. Use only a soft dry cloth to dust or wipe the lens area.

TROUBLESHOOTING

If the light does not work.

1. Make sure the switch and circuit breaker are on.
2. Make sure the wiring connection is correct.
3. Make sure the photocell is not exposed to light (if have photocell).
4. Make sure the connections between contact pins of connector and wires from power adaptor are in good condition.

If unable to fix any of the above issues, please consult a certified electrician.

FIVE-YEAR LIMITED WARRANTY: If, during normal use, this PATRIOT LIGHTING® lighting fixture breaks or fails due to a defect in material workmanship within five (5) years from the date of original purchase, simply bring this lighting fixture with the original sales receipt back to your nearest MENARDS® retail store. At its discretion, PATRIOT LIGHTING® agrees to have the product or any defective part(s) repaired or replaced with the same or similar PATRIOT LIGHTING® product or part free of charge, within the stated warranty period, when returned by the original purchaser with original sales receipt. This warranty; (1) excludes expendable parts including but not limited to light bulbs; (2) does not cover damage that has resulted from abuse or misuse; and (3) does not cover any losses, labor, injuries to persons/property or costs. This warranty does give you specific legal rights and you may have other rights, which vary from state to state.

Questions, problems, missing parts?
Before returning to your retailer, call our customer service at 1-800-887-6326.
Monday – Friday 9:00 a.m. – 5:00 p.m. CST