

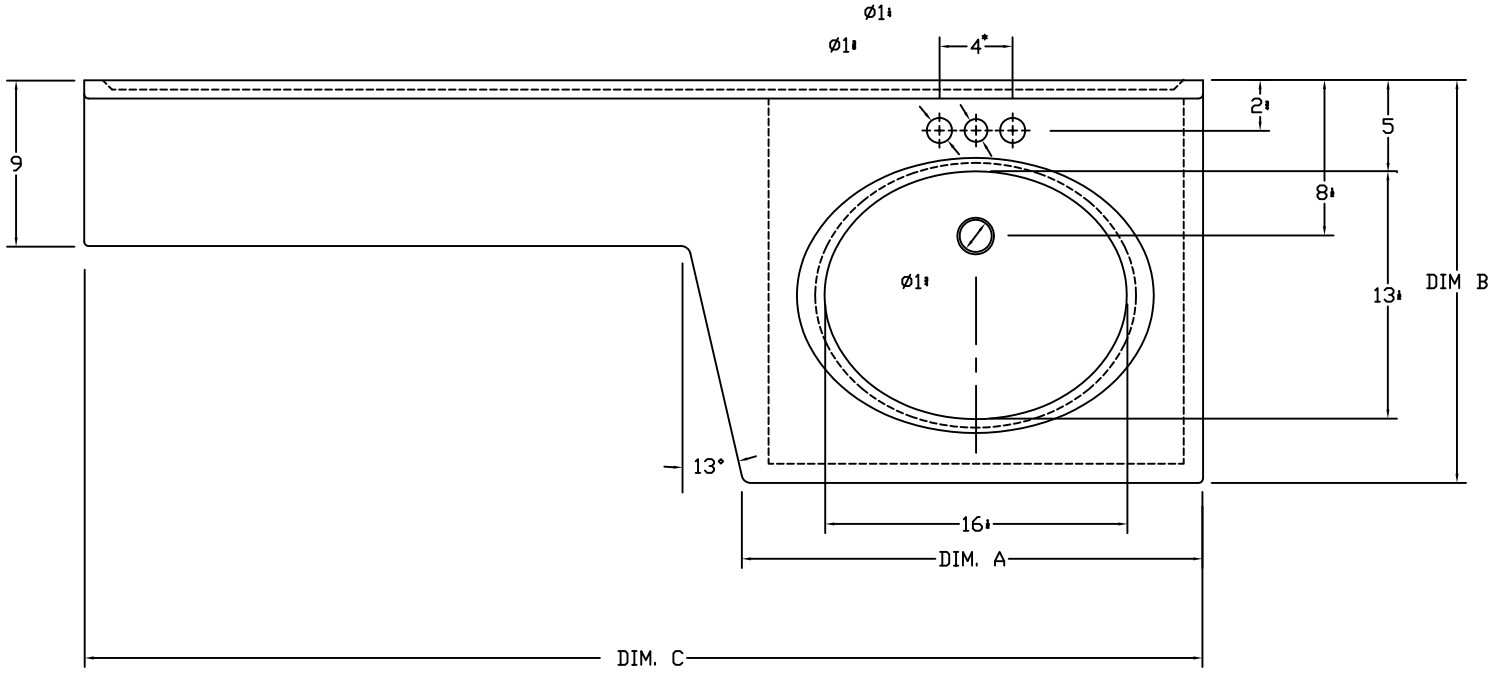

Imperial Marble Corp.

SOMONAUK,IL. 60552

VANITY TOP, BANJO
OVAL BOWL W/ SHELF

MODEL	DIM A	DIM B
CL/RBJ2522	25	22
CL/RBJ3122	31	22
CL/RBJ3722	37	22

DIM. C
SHELF CAN BE CUT TO LENGTH REQUIRED

* ALL TOPS HAVE 4" FAUCET DRILLINGS
8" & SINGLE AVAILABLE UPON REQUEST

This document was created with Win2PDF available at http://www.daneprairie.com.
The unregistered version of Win2PDF is for evaluation or non-commercial use only.