CONNECT-A-DOCK™

Assembly Instructions

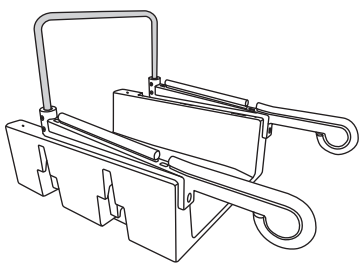

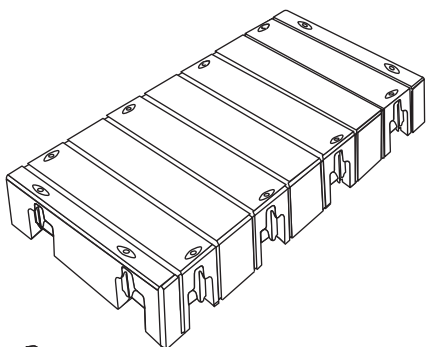

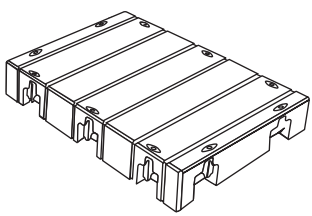

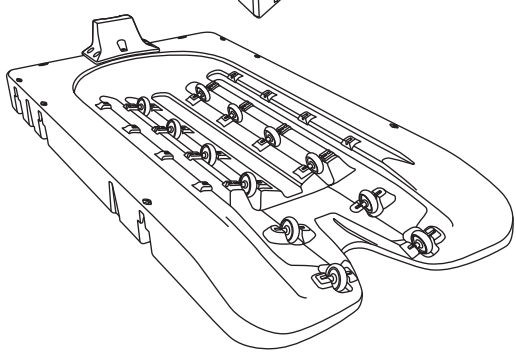

- **Floating Docks**
- **PWC Docking**
- **Kayak Launch**

07/08/25

Preface

Installation

A 1000 or 2000 Series dock should not be placed in areas with constant waves in excess of 12 inches in total wave height, as measured from crest to trough. Please note that placing a dock in an unsuitable location may void any warranty provided by Connect-A-Dock® or your local distributor or dealer if you have any questions regarding the suitability of your particular dock location.

Storage

When storing the Connect-A-Dock outside, the walking surface of the dock needs to face up. If stored upside down, water can get inside the docks through vent holes that allow air expansion.

Cleaning

For low maintenance cleaning use a stiff broom or brush with a garden hose. A pressure washer with no heat can also be used. When using soap, use an environmentally safe product.

Anchoring

Dock anchoring methods listed in this instruction manual are only suggestions. It is up to you to determine which method suits your needs.

Live Load

1000 Series (LP): 35 lbs per square foot (170 kg per square meter)

2000 Series (HP): 75 lbs per square foot (365 kg per square meter)

Connect-A-Port: 1500 lbs (680.9 kg)

Connector Sockets

1000 Series (LP): ~15" (38.1 cm) apart

2000 Series (HP): ~24" (60.96 cm) apart

Torque Specs

Tighten all 1000 Series (LP) and 2000 Series (HP) Connector hardware bolts to 25 lbs/ft (3.46 kg/m) of torque. Check all bolts every three months or as needed to insure all connector hardware is securely fastened.

Connect-A-Port® Product Installation and Use Warning Disclaimer

Repairs of a Connect-A-Port should only be performed by an authorized Connect-A-Port technician. If repair is performed by unauthorized persons, serious personal injury and/or property damage could occur.

If unauthorized personnel repair a Connect-A-Port, Connect-A-Dock hereby disclaims any and all warranties, expressed or implied. Connect- A-Dock limits its warranty to Connect-A-Dock's published Connect-A-Port warranty furnished with each product. No other warranty of any kind either verbal or implied including warranties of merchantability and fitness for a particular purpose are recognized.

The contents of this manual are subject to change without notice and should not be construed as a commitment, representation, warranty or guarantee of any method, product or device by Connect-A-Dock.

Reproduction or translation of any part of this manual, without the written permission of Connect-A-Dock, is prohibited.

Any inquiries concerning the Connect-A-Port published warranty or this manual and its contents please contact Connect-A-Dock.

The purpose of the cleat is to provide an area on the PWC Port to temporarily tie off another PWC, tie down a cover or other similar light duty tasks. The cleat is not designed to anchor the PWC Port or to tie two units together. If two units are to be tied/attached together there is a Side-by-Side Kit designed for that specific purpose. In addition, there are various anchoring options available so the cleat should never be used for this purpose.

Stainless Steel

Connect-A-Dock products use marine grade stainless steel for stainless steel metal components. Stainless steel may stain, discolor or attain an adhering layer of grime under normal service, and, especially, when used in salt water conditions. Any contamination of the metal surface by dirt, or other material, can reduce corrosion protection. Some corrosion can also occur when stainless steel comes in contact with dissimilar metals. The removal of dirt, grime and surface stains that occurs during normal handling and exposure to the elements is essential for optimum corrosion resistance to prevent surface staining (corrosion) or pitting. Dirt, grime and surface stains that occur during normal use and exposure to the elements should be cleaned with warm water with or without a gentle detergent, soap or ammonia. (Caution, do not use ammonia near anodized aluminum). Persistent stains can be removed with mild non-scratching abrasive powders such as typical household cleaners used with warm water, bristle brush, sponge or clean cloth followed by a rinse with clean water and wiped dry. Stubborn stains can be removed by using a damp cloth and a commercial stainless steel cleaner and polish, rubbing lightly in the direction of the polish lines on the stainless steel, then rinsing with clean water and wiping dry.

All specifications provided by Connect-A-Dock are based upon connect-a-dock test data and are provided without representation or warranty. Actual specifications, weights and dimensions may vary for a variety of reasons, including, without limitation, due to the rotational molding process. Specifications should be regarded as nominal values only and not as binding actual values. Please contact Connect-A-Dock if you have specific questions regarding the specifications of any Connect-A-Dock product.

Table of Contents

1000 Series—Low Profile (LP)

Float Sections....2
Corner Float Section....3
Extra Flotation....4

2000 Series—High Profile (HP)

Float Sections....5
Corner Float Section....6
Heavy Pole Connector....7
Extra Flotation....8
Utility Channel....10
Utility Channel End Cap....11

1000 (LP) & 2000 (HP) Series Accessories

Gangway....12
Gangway Roller Kit....14
Gangway Hinge (Wood)....15
Gangway Roller Kit (Wood)....16
Swim Ladder....17
Cleat....18
Kayak Rack....20
Finishing & Accessory Connectors....21
Guardrail....22
Self Wicking Planter....24
Bench....26
Edge Bumper....27

1000 (LP) & 2000 (HP) Series Anchoring

Pole Connector....28
Pole Auger....29
Dead Man Collar....30
Stiff Arm Fitting....31
Deep Water Hardware....32
Piling Loop....33

Connect-A-Port XL5 & XL6®

2000 Series Attachment....34
Fixed Dock Attachment....35
Floating Dock Attachment....36
Side by Side Connecting Kit for Connect-A-Port....38
Bow Stop Connecting Kit for Connect-A-Port XL5 & 6....39
Connect-A-Port XL5 & 6 Roller Replacement....40
Winch....41

YAKPort® Kayak Launch

Fixed Dock Attachment....42
Floating Dock Attachment....43
1000 or 2000 Series Connect-A-Dock....44
YAK Bars....45
Overhead Bar / Grab Bar....46

1000 Series Low Profile (LP) Dock

Tools Needed

9/16" (16 mm) Socket wrench
Long rope for holding docks to shore.

Before you begin: Determine the layout and location of your dock.

Hardware Included

3/8" x 1-1/4" (10 mm x 35 mm) Hex bolts
Diamond washers
Bushings

Instructions for:

Float Section (FS1030), (FS160)
Float Connector (FC1010), (FC1010M)

Step 1

Install Float Connectors into all Float Section sockets where other Float Sections will be attached. Secure Float Connectors into sockets with bolts, washers, and bushings provided (hand tighten only). Connect 2 or 3 Float Sections prior to placing into the water. Place Float Sections into water, secure to shore temporarily with rope.

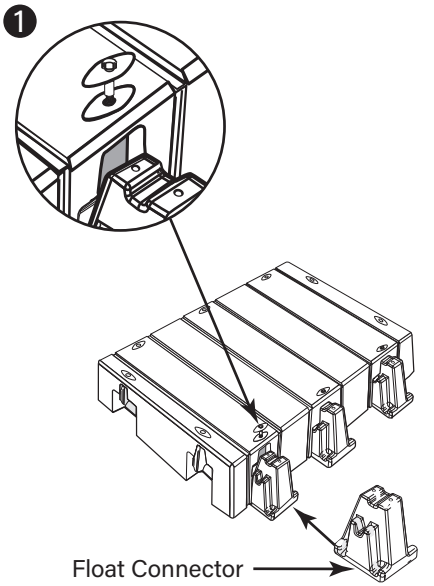

Step 2

Position yourself carefully on the floating Float Section(s). Continue adding Float Sections by placing them over the Float Connectors, shift your body weight to the new Float Section. Secure with bolts, washers, and bushings.

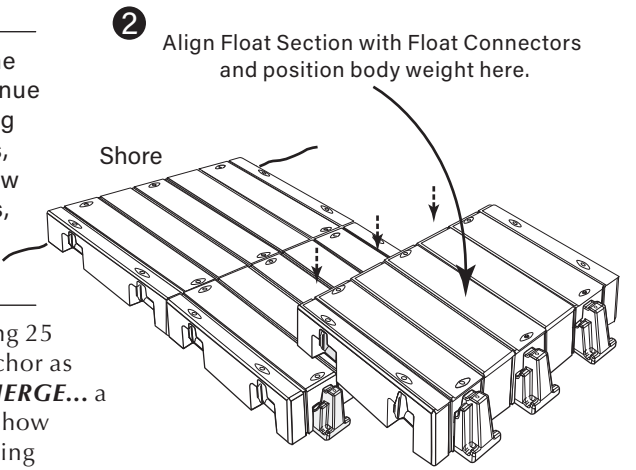

Step 3

Tighten all bolts in the dock using 25 lbs/ft (3.46 kg/m) of torque. Anchor as desired. ***NOTE: DO NOT SUBMERGE...*** a minimum of 2" (5.08 cm) must show above the water surface for venting purposes.

Note: Check all bolts every three months or as needed to insure all connector hardware is securely fastened.

1000 Series (LP) Corner Float Section

Tools Needed

9/16" (16 mm) Socket wrench

Instructions for:

Corner Float Section (CFS1010)

The Corner Float Section adds strength, stability and more walking space to the fingers of your dock.

Hardware Included

3/8" x 1-1/4" (10 mm x 35 mm) Hex bolts
Diamond washers
Bushings

Step 1

Install four Float Connectors into Float Section sockets where the Corner Float Section will be attached. Secure Float Connectors into sockets with bolts, washers, and bushings as shown (Hand tighten only).

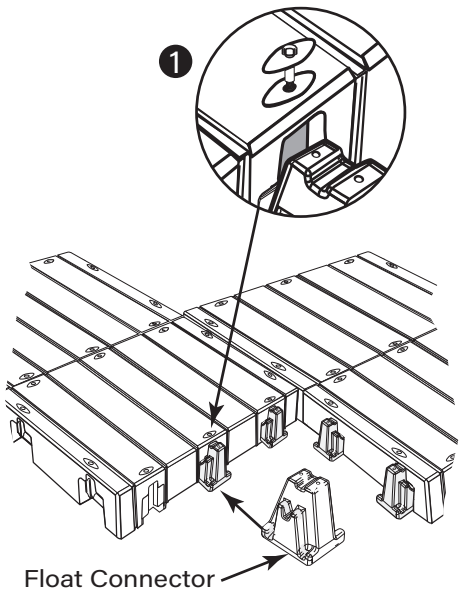

Step 2

Place the Corner Float Section over the Float Connectors, then shift your body weight carefully from the dock to the Corner Float Section to hold it in place. Secure with bolts, washers, and bushings as in Step 1.

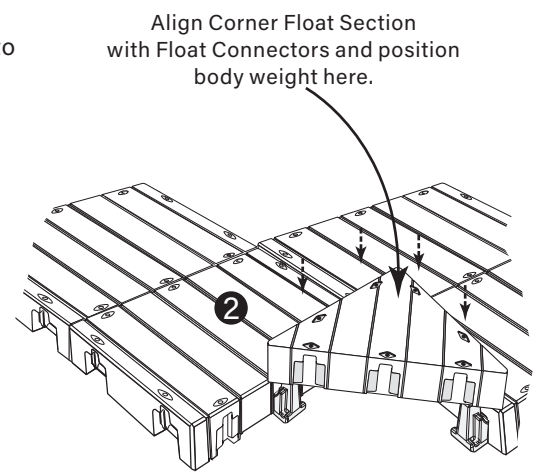

Step 3

Tighten all bolts in the dock using 25 lbs/ft (3.46 kg/m) of torque. Anchor as desired.
NOTE: DO NOT SUBMERGE... a minimum of 2" (5.08 cm) must show above the water surface for venting purposes.

Note: Check all bolts every three months or as needed to insure all connector hardware is securely fastened.

1000 Series (LP) Extra Flotation

Step 1

After the dock is placed into the water, snap the raised portion of the Extra Flotation up and into the air chamber on the bottom of the Float Section as shown by pushing Extra Flotation down into the water and under the Float Section.

Instructions for:

Extra Flotation (EF1010)

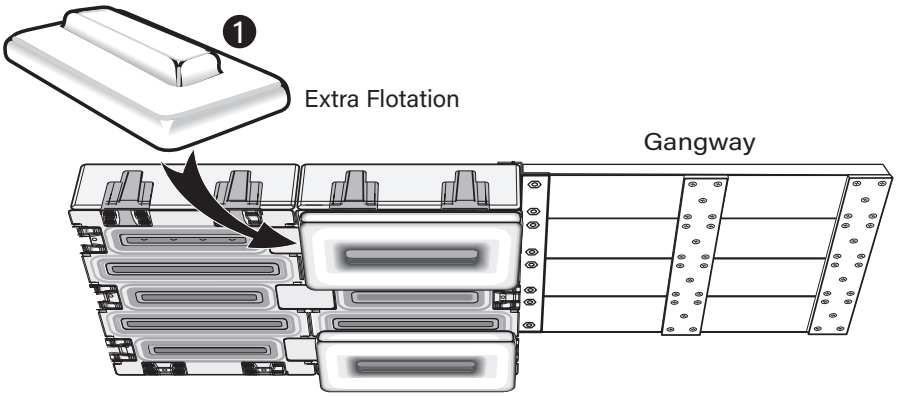

Recommendation

Use Extra Flotation whenever extra weight is added to your dock for additional buoyancy and stability. For added stability, place Extra Flotation at the end and at the corners of a dock. Extra Flotation can also be stacked into another Extra Flotation when more stability is needed.

A 5′ (1.524 m) to 10′ (3.048 m) gangway requires Extra Flotation.

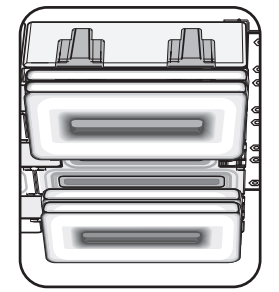

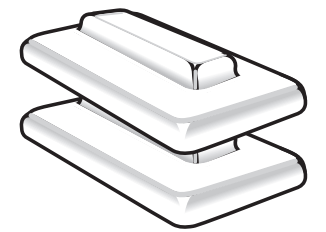

Note: A 1000 Series Extra Flotation will add 60 lbs. (27.22 kg) of buoyancy to a 1000 Series Float Section.

2000 Series High Profile (HP) Dock

Tools Needed

9/16″ (16 mm) Socket wrench
Long rope for holding docks to shore.

Before you begin: Determine the layout and location of your dock.

Hardware Included

3/8″ x 1-1/4″ (10 mm x 35 mm) Hex bolts
Diamond washers
Bushings

Instructions for

Float Section (FS2096), (FS2024)
Float Connector (FC2020), (FC2020M)
2 or more people are needed for installation

Step 1

Install Float Connectors into all Float Section sockets where other Float Sections will be attached. Secure Float Connectors into sockets with bolts, washers, and bushings provided (hand tighten only). Place first Float Section into the water and temporarily attach to shore with rope.

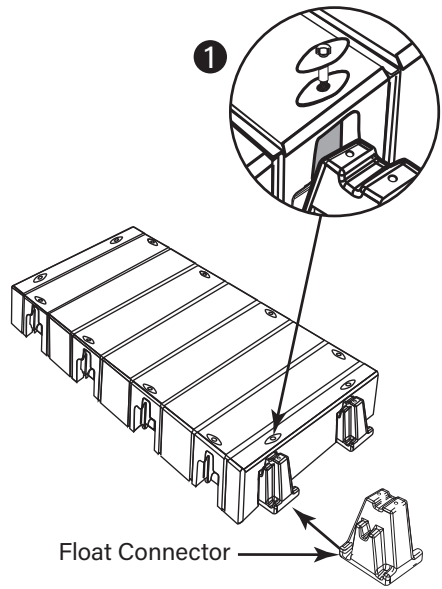

Step 2

Position yourself carefully on the floating Float Section(s). Continue adding Float Sections by placing them over the Float Connectors, shift your body weight to the new Float Section and hook into place. Secure with bolts, washers, and

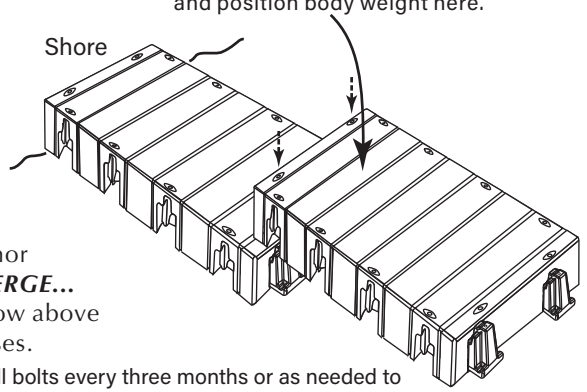

Step 3

Tighten all bolts in the dock using 25 lbs/ft (3.46 kg/m) of torque. Anchor as desired. ***NOTE: DO NOT SUBMERGE...*** a minimum of 3″ (7.62 cm) must show above the water surface for venting purposes.

Note: Check all bolts every three months or as needed to insure all connector hardware is securely fastened.

2000 Series (HP) Corner Float Section

Tools Needed

9/16" (16 mm) Socket wrench

The Corner Float Section adds strength, stability and more walking space to the fingers of your dock.

Hardware Included

3/8" x 1-1/4" (10 mm x 35 mm) Hex bolts
Diamond washers
Bushings

Step 1

Install four Float Connectors into Float Section sockets where the Corner Float Section will be attached. Secure Float Connectors into sockets with bolts, washers, and bushings as shown (Hand tighten only).

Step 2

Place the Corner Float Section over the Float Connectors, then shift your body weight carefully from the dock to the Corner Float Section to hold it in place. Secure with bolts, washers, and bushings as in Step 1.

Step 3

Tighten all bolts in the dock using 25 lbs/ft (3.46 kg/m) of torque. Anchor as desired.
NOTE: DO NOT SUBMERGE... a minimum of 2" (5.08 cm) must show above the water surface for venting purposes.

Instructions for:

Corner Float Section (CFS2022)

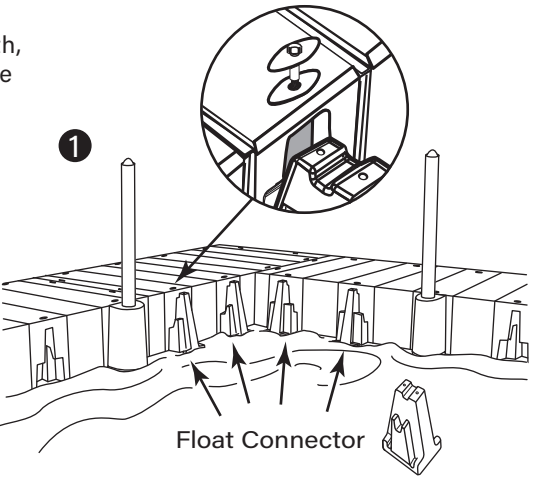

2 Align Corner Float Section with Float Connectors

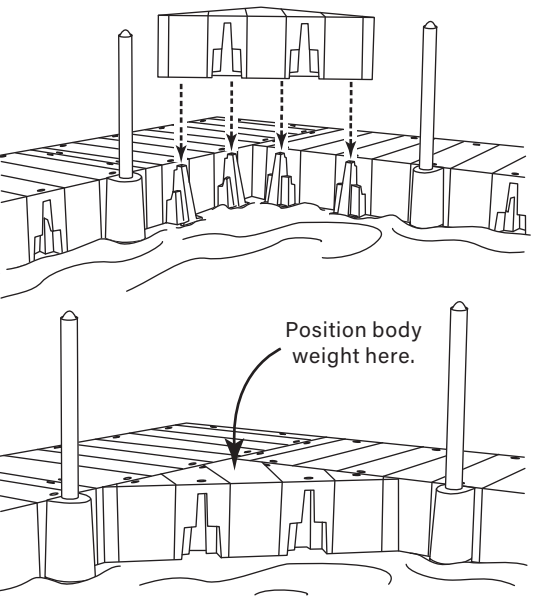

Note: Check all bolts every three months or as needed to insure all connector hardware is securely fastened.

2000 Series (HP) Dual Pole Connector

Tools Needed

9/16" (16 mm) Socket wrench

Hardware Included

3/8□x 1-1/4 □(10 mm x 35 mm) Hex bolts
Diamond washers
Bushings

Step 1

Install two Float Connectors into Float Section sockets where the Dual Pole Connector will be attached. Secure Float Connectors into sockets with bolts, washers, and bushings as shown (Hand tighten only).

Step 2

Place the Dual Pole Connector over the Float Connectors, then push down on Dual Pole Conntor to hold in place. Secure with bolts, washers, and bushings as in Step 1.

Step 3

Tighten all bolts in the dock using 25 lbs/ft (3.46 kg/m) of torque. Anchor as desired.
NOTE: DO NOT SUBMERGE... a minimum of 2 □(5.08 cm) must show above the water surface for venting purposes.

Instructions for:

Dual Pole Conector (DPC2023)

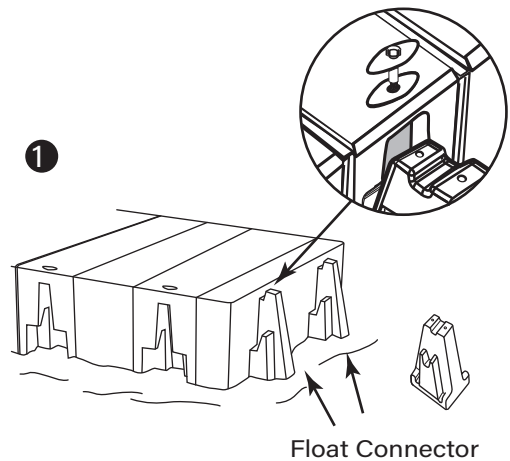

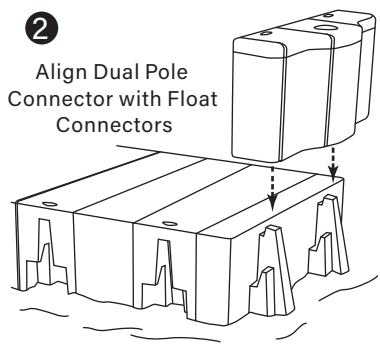

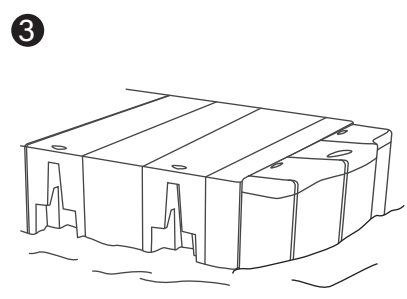

Note: Check all bolts every three months or as needed to insure all connector hardware is securely fastened.

2000 Series (HP) Extra Flotation

Tools Needed

9/16" (16 mm) Socket wrench

Before you begin: Determine the layout and location of your dock. When installing a new dock, it is easier to insert the Extra Flotation before the Float Section is placed in the water. For existing docks, go to step 1.

Step 1

When installing a 2000 Series Extra Flotation to an existing dock, two Float Sections need to be removed from the water. Start by unbolting the Float Connectors from Float Section (1a). Place Float Section (1a) out of the water in location (1b).

Step 2

Unbolt the Float Connectors from the main dock section (2a). Place Float Section (2a) out of the water in location (2b).

Step 3

Insert Extra Flotation under Float Section (2b).

Instructions for:

Extra Flotation (EF2020)
2 or more people are needed for installation

Step 4

Reattach Float Section (1b) to (2b) with Float Connectors (hand tighten only).

Step 5

Place Float Section (1b & 2b) into the water and reattach to the main dock section. Tighten all bolts in the dock using 25 lbs/ft (3.46 kg/m) of torque. Anchor as desired. NOTE: DO NOT SUBMERGE... a minimum of 3" (7.62 cm) must show above the water surface for venting purposes.

Recommendation

Use 2000 Series Extra Flotation to add 300 lbs (136.08 kg) of buoyancy and stability to your floating docks and where excessive weight is placed. Examples: Under heavy gangway or storage boxes.

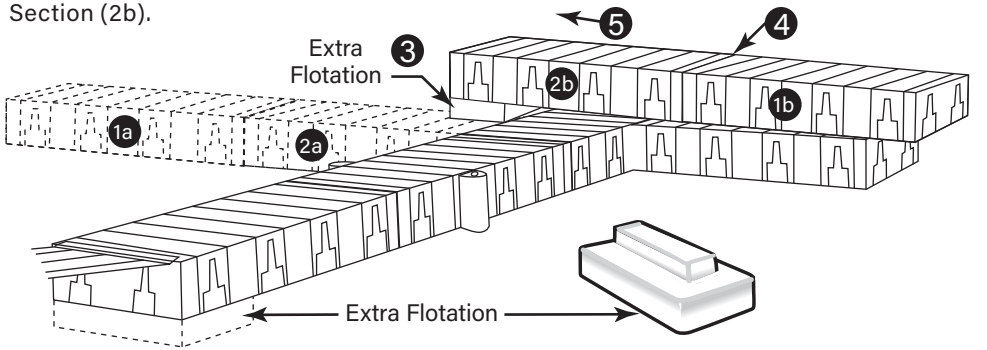

Note: Check all bolts every three months or as needed to insure all connector hardware is securely fastened.

2000 Series (HP) Extra Flotation

The amount of weight being placed on to the dock will determine the number of Extra Flotations that will be needed. Position as follows:

Instructions for:

Extra Flotation (EF2020)
2 or more people are needed for installation

Bottom View of 2096 Float Section

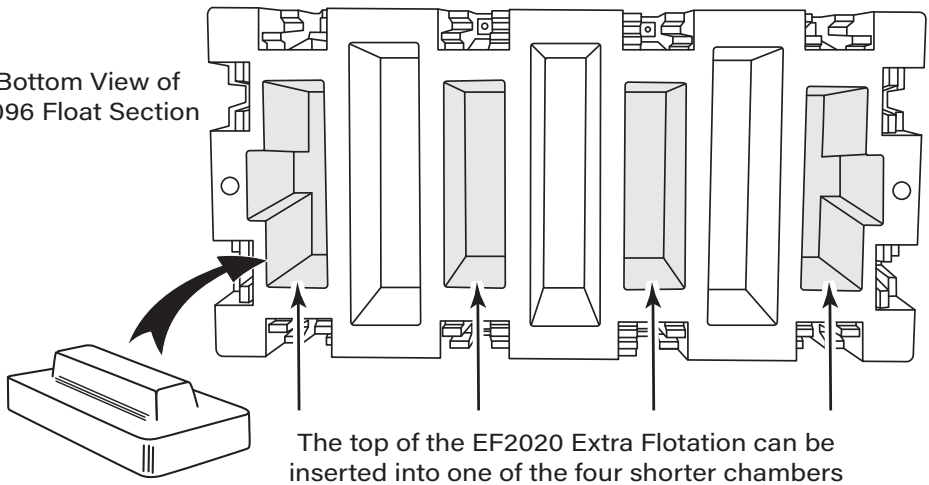

EF2020 Extra Flotation

The top of the EF2020 Extra Flotation can be inserted into one of the four shorter chambers on the bottom of the FS2096 Float Section (FS2024 Float Section has one chamber).

Side View of 2096 Float Section with Extra Flotation

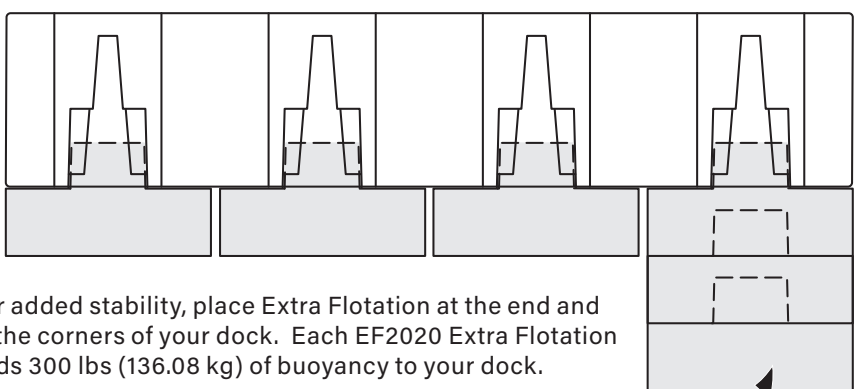

For added stability, place Extra Flotation at the end and at the corners of your dock. Each EF2020 Extra Flotation adds 300 lbs (136.08 kg) of buoyancy to your dock.

Extra Flotation can be stacked into another Extra Flotation when more buoyancy is needed.

2000 Series High Profile Utility Channel

Tools Needed

9/16" (16 mm) Socket wrench

Before you begin: Determine the layout and location of your utility channel.

Hardware Included

3/8" x 1-1/4" (10 mm x 35 mm) Hex bolts
Diamond washers
Bushings

Instructions for:

Utility Channel (UT2024), (UT2048), (UTC2048)

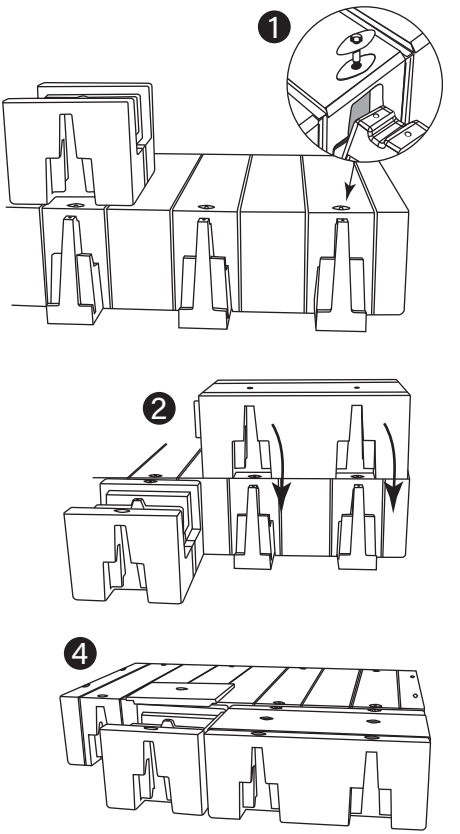

Step 1

Install Float Connectors into all Float Section sockets where Utility Channel Sections will be attached. Secure Float Connectors into sockets with bolts, washers, and bushings provided (hand tighten only).

Step 2

Female end of Utility Channel points in direction adding sections. Add Utility Channel by placing it over the Float Connectors, shift your body weight to the Utility Channel and hook into place. Secure with bolts, washers, and bushings. (hand tighten only) Secure with bolts, washers, and bushings. Remove lid and set aside. Continue adding Utility Channel floats.

Step 3

Tighten all bolts in the dock using 25 lbs/ft (3.46 kg/m) of torque. Anchor as desired. ***NOTE: DO NOT SUBMERGE...*** a minimum of 3" (7.62 cm) must show above the water surface for venting purposes.

Step 4

Insert lid starting with last Utility Channel placed. Tighten per Step 3

FOR SAFE INSTALLATION AND OPERATION - All utilities conduit needs to meet all state and local utilities construction codes

Note: Check all bolts every three months or as needed to insure all connector hardware is securely fastened.

2000 Series Utility Channel End Cap

Tools Needed

Drill - 1/8" (3 mm) drill bit
Awl
Phillips Screw driver

Materials Needed

4- #8 Truss head 3/4"(4.2mm x 1.4mm x 20mm) (Stainless Steel)
Silcon



Step 1

Place End Cap into the Utility Channel with wide side at the top. End Cap placed on male end chaffer side out and female end chaffer side in. Use an awl to mark hole locations. Remove End Cap.

Step 2

Drill the holes with 1/8" (3 mm) bit.

Step 3

Place End Cap back into the Utility Channel. Then coat the Truss head screws with some silicon. Hand tighten the screws. (Don't over tighten will strip the holes).

Instructions for:

Utility Channel (UT2024), (UT2048), (UTC2048)

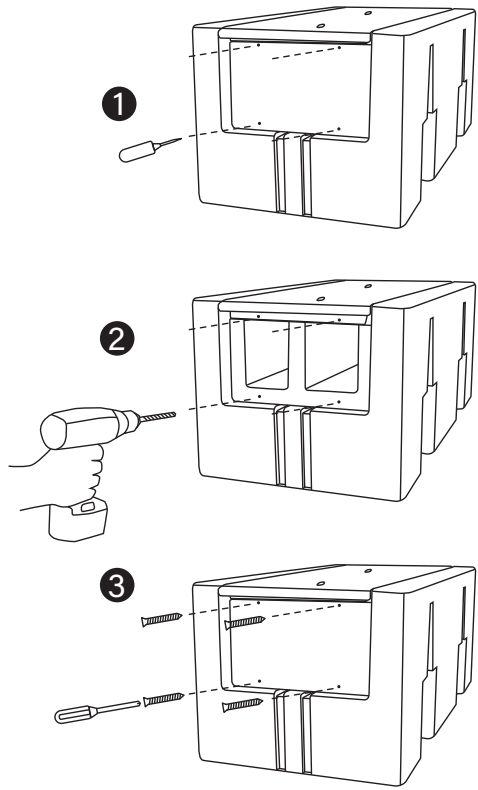

Note: The bottom two Screws are optional, if the lid will be removed frequently.

Gangway

Tools Needed

3/4″ Socket wrench
5/8″ Wrench or Socket wrench
Not available in metric

Items Included

(1) Gangway Frame
(1, 2 or 3) Decking Panel(s)
(1) Hinge
(2) 1/2″ x 2-1/2″ Carriage bolts
(2) 7/16″ x 2 1/2″ Hex bolts
(2) 1/2″ Nuts
(2) 7/16″ Nylock nuts
(2) 1/2″ Flat washers
(2) 7/16″ Flat washers

Instructions for:

Gangway (GW1024), (GW1028), (GW1032),optional (GHGW5), (GW1036)



Step 1

Place Hinge on Float Section and line up Hinge holes with Float sockets. Secure Hinge to Float Section using Carriage bolts, Flat washers and Nuts.

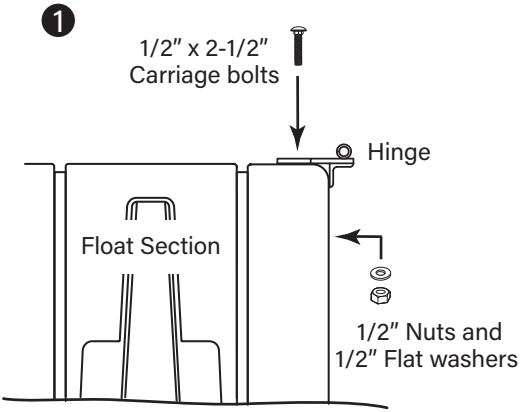

Step 2

Attach Gangway Frame to Hinge by lining up brackets with the holes on the sides of the Hinge. Insert Hex bolts with end of bolt pointing outward as shown. Secure with Flat washers and Nylock nuts using Socket wrench and wrench.
Note: If adding a Roller Kit-Install Rollers before Step 3.

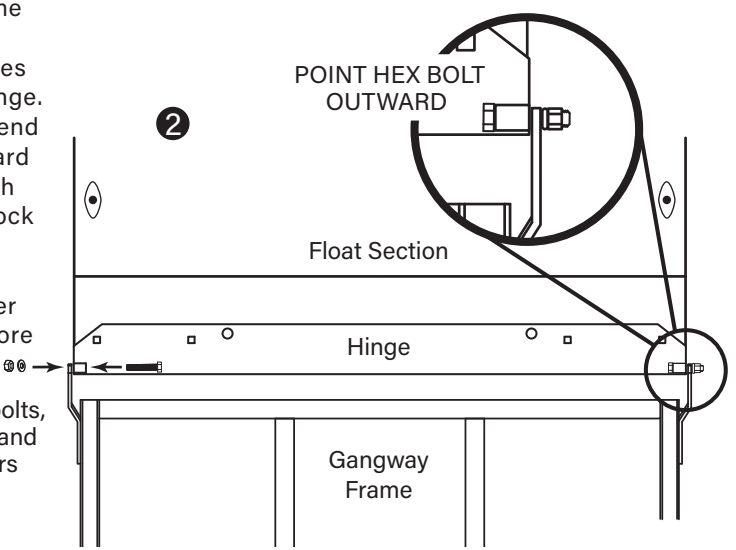

Gangway

Step 3

With the notched end forward, position aluminum cross members on the back side of the Decking Panel inside the Gangway Frame.

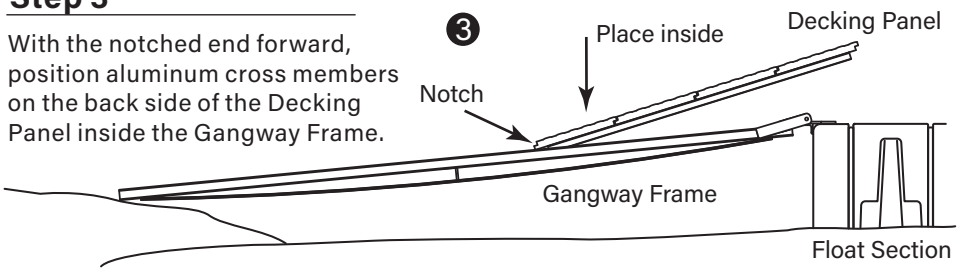

Step 4

Slide Decking Panel forward into place. Repeat with second Decking Panel for gangway GW1028.

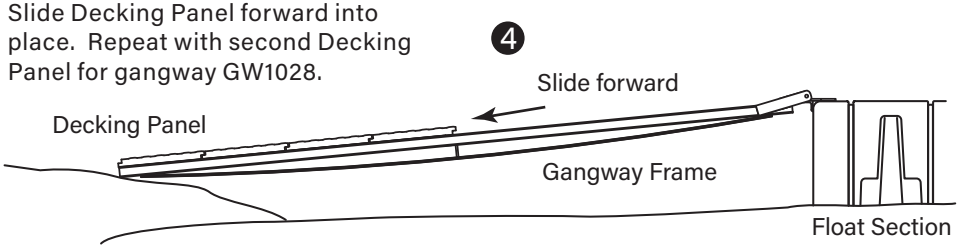

Step 5

Repeat Step 3 and Step 4 with second Decking Panel for gangway GW1028. Make sure the tip of the Second Decking Panel is under the lip of the First Decking Panel.

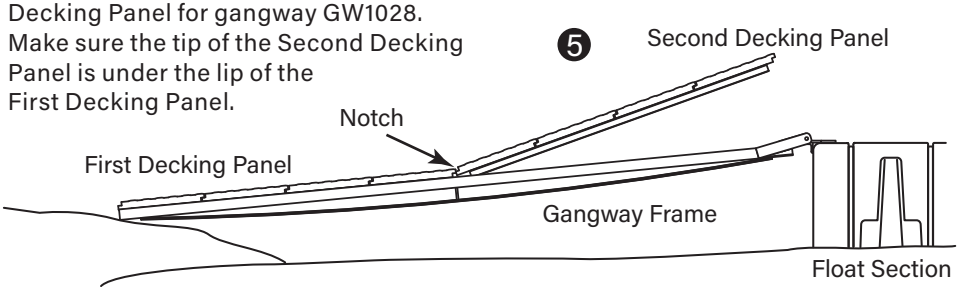

Assembled GW1024
4′ x 4′ Gangway
(1.2 m x 1.2 m)

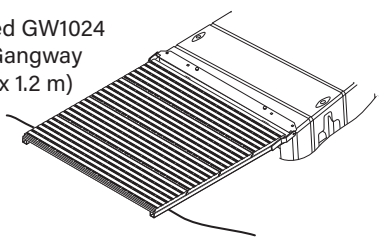

Assembled GW1028
4′ x 8′ Gangway
(1.2 m x 2.4 m)

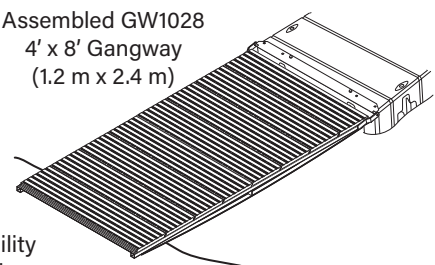

Recommendation: To add more buoyancy and stability with Gangway, use Extra Flotation under Float Section.

Note: Check all bolts every three months or as needed to insure all connector hardware is securely fastened.

Gangway Roller Kit

Tools Needed

9/16" Wrench or Socket wrench
Not available in metric

Items Included

(4) 3/8" x 1-1/2" Hex bolts
(4) 3/8" Nuts
(4) 3/8" Washers
(4) 3/8" Lock washers

Instructions for:

Roller Kit (RK1020)
Gangway (GW1024), (GW1028), (GW1032)

Step 1

Set Gangway frame upside down on dock. Note: If Panels are on the Gangway Frame, remove before setting Frame upside down.

Step 2

Align Rollers to holes on the inside of the Frame. Attach with Bolt head and Washer on the outside of the Frame and the Lock Washer and nut on the inside. Continue to Gangway instruction Step 3 in add Panels.

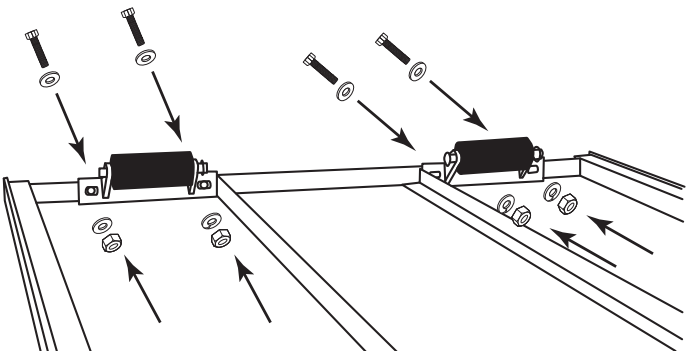

Gangway Hinge

Step 5

Turn gangway right side up; then place the Gangway Hinge on top deck of Float Section so square holes on Gangway Hinge match holes on Float Section.

Step 6

Secure Gangway Hinge to Float Section with 3 carriage bolts.

Step 7

Extra Flotation is recommended.
See Extra Flotation instructions.

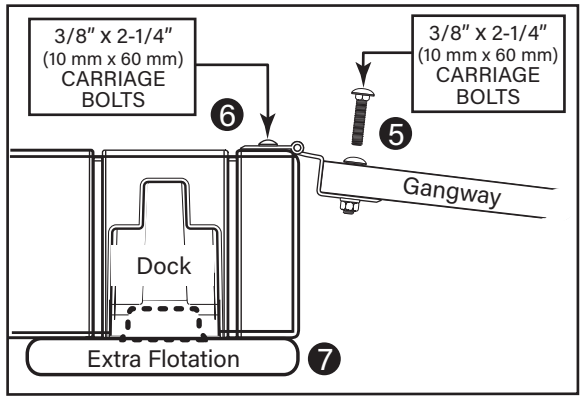

Gangway Roller Kit

Items Included

(1) Roller Kit (2 - rollers included)
Not available in metric

Instructions for:

Roller Kit (RK1020)

Materials Needed

(4) 3/8" x 4" Carriage bolts
(4) 3/8" Split lock washer
(4) 3/8" Hex nuts

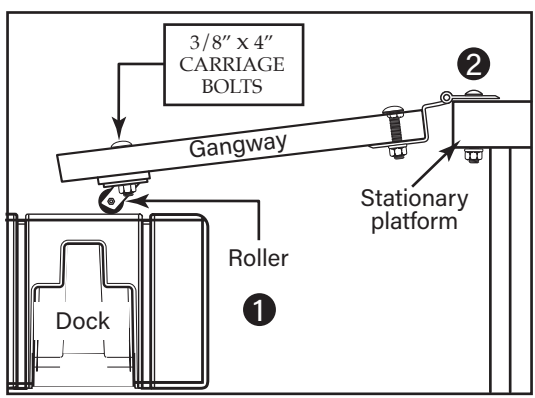

Step 1

Place Rollers squarely on cross member of plank, drill bolt holes to match the oval roller holes. Use a hammer to insert four 4" carriage bolts from top side of gangway, secure from bottom with lock washers and nuts. Don't over tighten.

Step 2

Place Gangway Hinge on top deck of stationary platform. Secure gangway to stationary platform with long carriage bolts. (Note: Use 3 carriage bolts.)

Gangway Hinge

Tools Needed

Hammer
9/16" (16 mm) socket wrench
Drill with 3/8" (10 mm) bit and
phillips screw driver bit

Materials Needed

(40) 2" (5.08 cm) Steel deck screws
(4) 2" x 12" (5.08 cm x 30.48 cm) Planks
cut to length not exceeding 8' (2.4384 m)
(3) 1" x 4" (2.54 cm x 10.16 cm) Planks
cut to length for cross members
(8) 3/8" x 2-1/4" (10 mm x 60 mm)
Stainless steel carriage bolts with
lock washers and nuts

Items Included

(1) Gangway Hinge
(3) 3/8" x 2-1/4" (10 mm x 60 mm)
Stainless steel carriag e bolts with
flat washers and lock nuts

Step 1

Place four planks side by side.

Step 2

Place cross members at lower edge and center.

Step 3

Screw cross members to planks with steel deck screws, as shown.

Step 4

Place Gangway Hinge across top end of planks, drill bolt holes to match the round hinge holes. Use a hammer to insert eight of the carriage bolts from top side of gangway, secure from bottom with lock washers and nuts. Don't over-tighten.

Instructions for:

Gangway Hinge (GH1020GAL), (GH2010), (GH2010M), (GH2156), (GH2156GAL) , (GH2156SS)

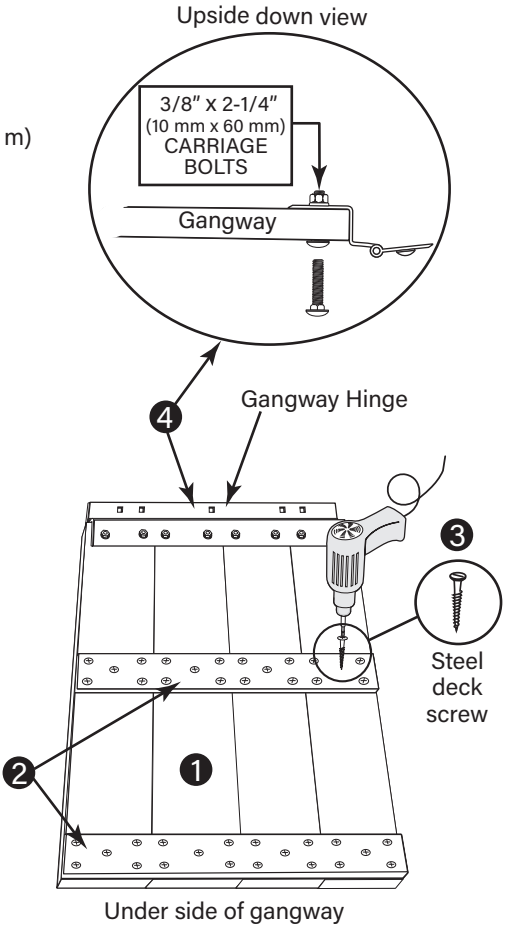

Note: Check all bolts every three months or as needed to insure all connector hardware is securely fastened.

Please use safety glasses while building the gangway.

Stationary Swim Ladder

Tools Needed

3/4" Wrench
(2) 9/16" Wrench

Warning: Swim Ladder does not float—tether to dock before beginning installation.

Step 1

(a) Slide ladder bracket on to the ladder until it aligns with mounting holes. (b) Attach the bracket to the ladder with (2) each side 3/8"-2 3/4" bolts and Nuts. Tighten all bolts to a max of 25 lbs/ft (3.46 kg/m) of torque.

Step 2

Swim Ladder has two Metal Accessory Connector attachment points. (a) 1000 Series inner hole set. (b) 2000 Series outer hole set.

Step 3

(a) Attach Metal Accessory Connector to the Swim Ladder Bracket with the 1/2" Carriage bolts, washers and nuts. Only hand tighten at this time. (b) Insert Metal Accessory Connectors into float section connector slots.

Step 4

(a) Secure Metal Accessory Connectors into the float section sockets with 3/8"-11/4" bolts, diamond washers, and bushings. (b) Tighten the 1/2" Carriage bolts. Tighten all bolts to a max of 25 lbs/ft (3.46 kg/m) of torque.

Instructions for:

400477-Swim Ladder (SL1020)

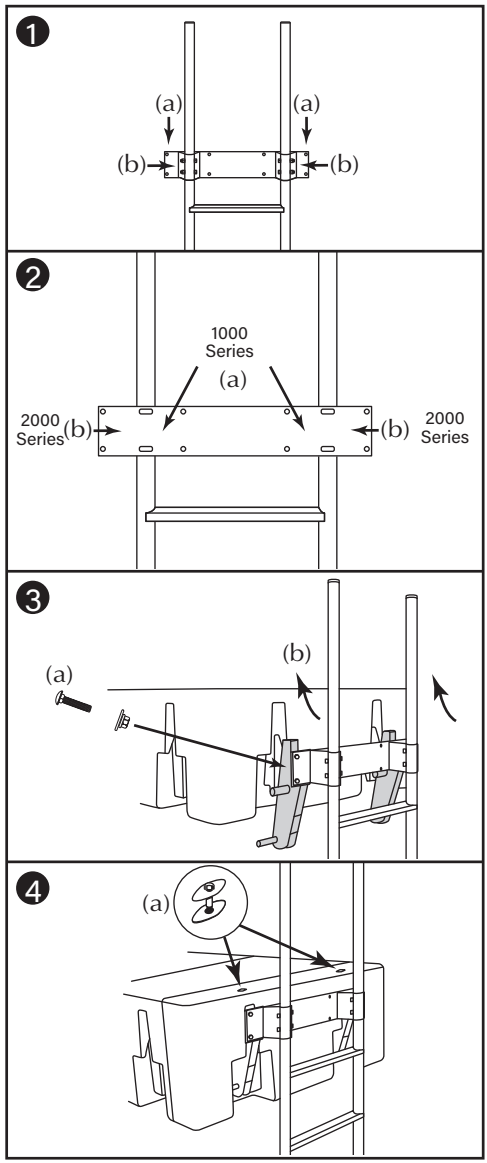

Recommendation: To add more stability at the Swim Ladder, use Extra Flotation under Float Section.

Note: Check all bolts every three months or as needed to insure all connector hardware is securely fastened.

Cleat

Tools Needed

3/16" (10 mm) Allen Wrench

Step 1

Hold metal channel flat alongside plastic straps and slide channel through hole.

Step 2

Hold ends of straps between thumb and forefinger and pull toward you until channel rests flush behind dock. Slide plastic cap along straps with other hand until flange of cap is flush with dock.

Step 3

Snap straps at dock by pushing side to side, snapping off straps level with flange of cap.

Step 4

Place cleat over flange. Insert bolt through cleat and tighten until flush against item, then stop.

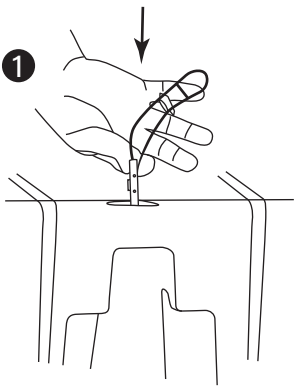

Instructions for:

Cleat (8C1020), (8C1020M)

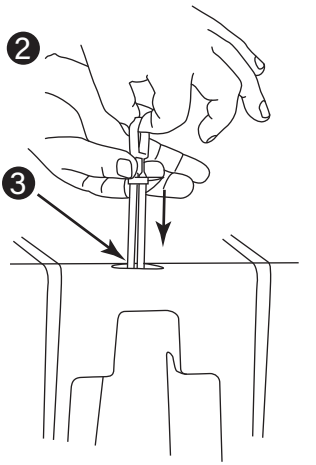

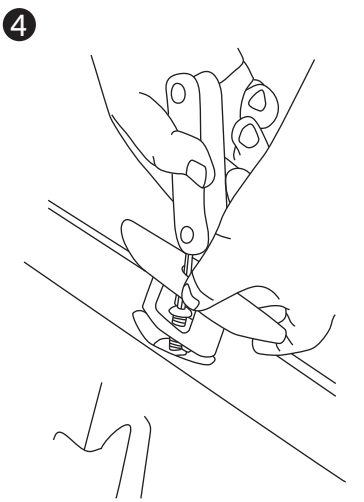

2000 Series Dual Cleat

Tools Needed

3/4" socket wrench

Materials Needed

(2) - 1/2"-13 x 2- 1/2" long SS Carriage Bolts
(2) - 1/2"-13 SS hex nut
(2) - 1/2" SS flat washer
(2) - 1/2" SS lock washer

Step 1

Algin Dual Cleat with float section connector holes.

Step 2

Insert Carriage Bolts

Step 3

Secure Carriage Bolts with Washer, Lock Washer & Hex Nut.

Instructions for:

Dual Cleat (DC2000)

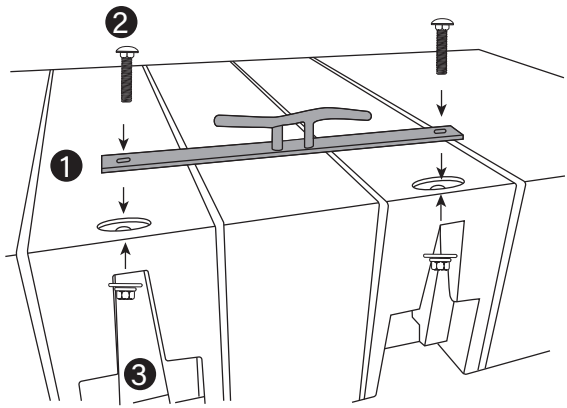

Kayak Rack

Tools Needed

3/4" open end wrench
1/2" socket wrench

Hardware Included

(8) - ½"-13 x 1" Carriage Bolts
(8) - ½" Stainless Steel washers
(8) - ½"-13 Brass Nylon Nuts
(4) - 5/16"- 16 x 2 ½" Stainless Steel Bolts
(4) - 5/16" Stainless Steel Washers
(4) - 5/16" Stainless Steel Eye Bolts

Step 1

(a) Screw eyelet into rod. (b) Align rod with lower hole, secure with bolt & washer.

Step 2

Attach Kayak Rack to the Metal Accessory Connector with Carriage Bolts, washer & Nylon Nut.

Step 3

Determine Kayak Rack location. Insert Metal Accessory Connector into float section connector slots. Tighten all bolts in the dock using 25 lbs/ft (3.46 kg/m) of torque.

Instructions for:

Kayak Rack (KR1020)

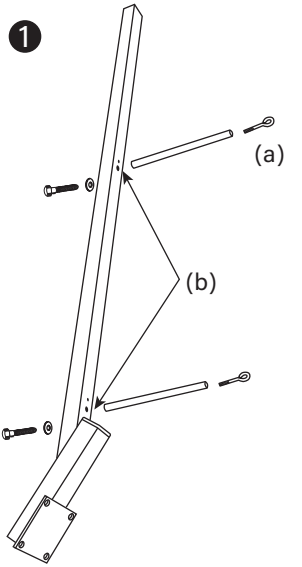

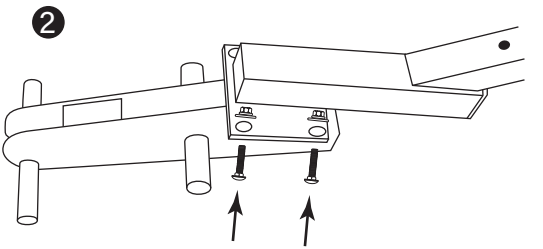

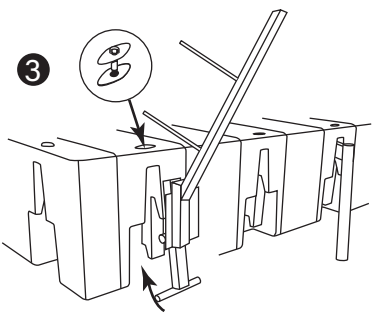

Finishing Connectors

Tools Needed

Phillips screw driver

Hardware Included

Phillips screw
Round washer



Instructions for:

Finishing Connector (FC1000), (FC2000)

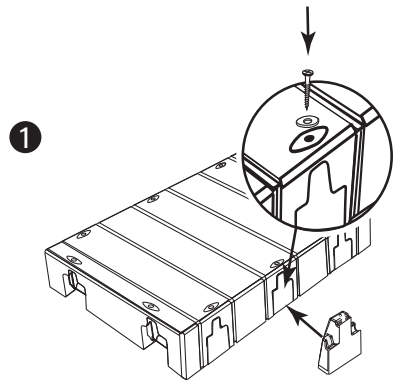

Use Accessory Connectors to attach functional accessories to your floating dock.

Step 1

Install Finishing Connectors into sockets where needed. Secure Connectors into sockets from top with screw, washer as shown. Don't over tighten - Screw is tapping into the connector.

Note: Check all bolts every three months or as needed to insure all connector hardware is securely fastened.

Accessory Connectors

Tools Needed

9/16" (16 mm) Socket wrench

Hardware Included

3/8" x 1-1/4" (10mm x 35 mm) Hex bolt
Diamond washer
Bushing




Instructions for:

Accessory Connector (AC1000), (AC1000M), (AC2000), (AC2000M)

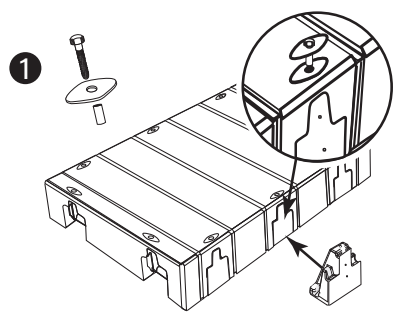

Use Accessory Connectors to attach functional accessories to your floating dock.

Step 1

Install Finishing or Accessory Connectors into sockets where needed. Secure Connectors into sockets from top with bolts, washers, and bushings as shown. Tighten 1000 and 2000 Series Connectors to 25 lbs/ft (3.46 kg/m) of torque.

Note: Check all bolts every three months or as needed to insure all connector hardware is securely fastened.

1000 Series (LP) Guardrail

Tools Needed

9/16" Socket wrench
Not available in metric

Instructions for:

Guardrails (GR1026), (GR1041), (GR1056)

Hardware Included

(2) 1000 Series (LP) Accessory Connectors
(2) 3/8" x 3/4" Hex bolt
(2) 3/8" Diamond washers

Step 1

Using hex bolts and washers, attach both 1000 Series (LP) Accessory Connectors to Guardrail as shown.

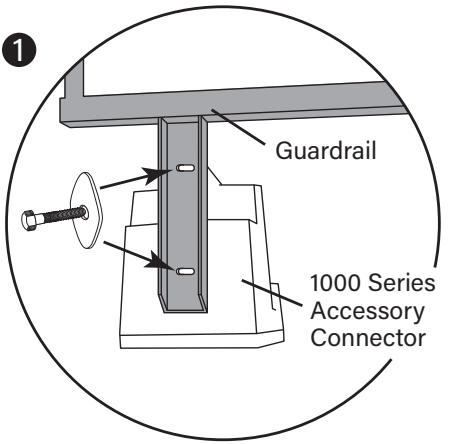

Step 2

Install 1000 Series (LP) Accessory Connectors with attached Guardrail into sockets where needed.

Step 3

Secure 1000 Series (LP) Accessory Connectors into sockets from top with bolts, washers, and bushings as shown. Tighten 1000 Series (LP) Accessory Connectors to 25 lbs/ft (3.46 kg/m) of torque.

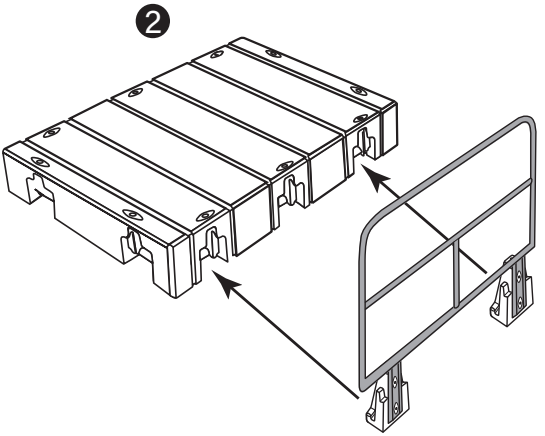

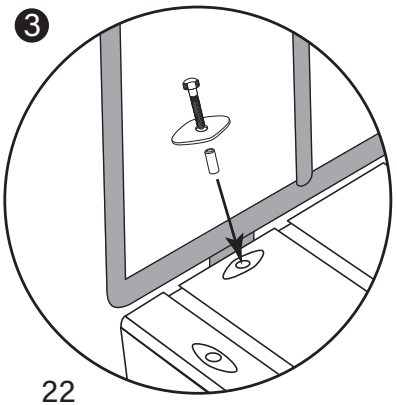

Recommendation: To add more buoyancy and stability with Guardrail, use Extra Flotation under Float Section.

2000 Series (HP) Guardrail

Tools Needed

9/16″ Socket wrench
Not available in metric

Instructions for:

Guardrails (GR2044BR),(GR2067BR),
(GR2067LPBR), (GR2092BR), (GR2092FSBR)
2 or more people are needed for installation

Hardware Included

(2) 2000 Series (HP) Accessory Connectors
(2) 3/8″ x 3/4″ Hex bolt
(2) 3/8″ Diamond washers

Step 1

Using hex bolts and washers, attach both 2000 Series (HP) Accessory Connectors to Guardrail as shown.

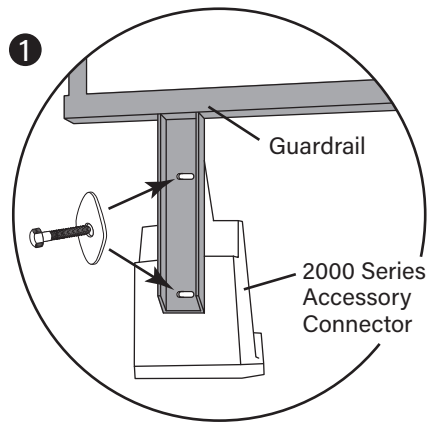

Step 2

Install 2000 Series (HP) Accessory Connectors with attached Guardrail into sockets where needed.

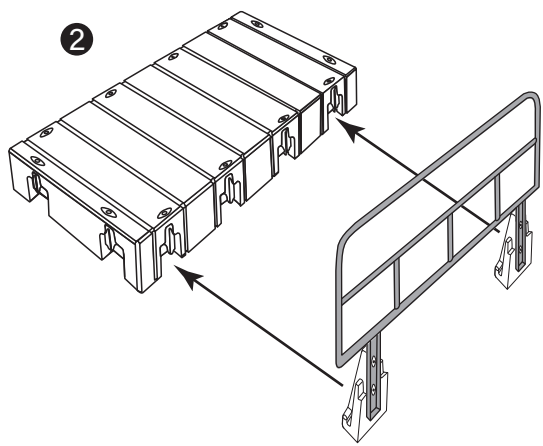

Step 3

Secure 2000 Series (HP) Accessory Connectors into sockets from top with bolts, washers, and bushings as shown. Tighten 2000 Series (HP) Accessory Connectors to 25 lbs/ft (3.46 kg/m) of torque.

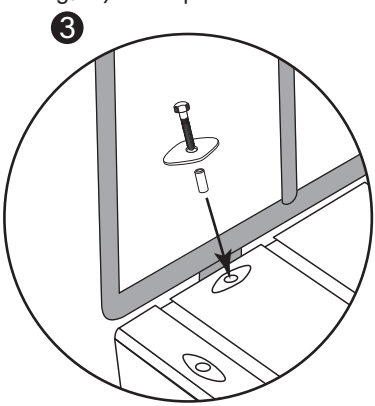

Recommendation: To add more buoyancy and stability with Guardrail, use Extra Flotation under Float Section.

Note: Check all bolts every three months or as needed to insure all connector hardware is securely fastened.

Self Wicking Planter & Pole Connector

Tools Needed

9/16" (16 mm) Socket wrench

Hardware Included

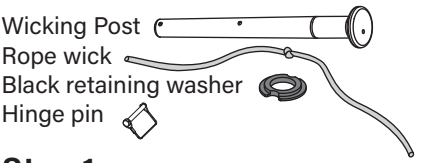

Instructions for:

Self Wicking Planter (SWP1020)
1000 Pole Connector (PC1010), (PC1010M)
2000 Pole Connector (PC2022), (PC2022M)

Step 1

Insert Wicking Post thru Planter from the top, making sure that it is fully seated in the bottom of the pot.

Step 2

The rope wick has a long end and a short end, relative to the knot. Insert the short end of rope down thru the Planter/Wicking Post assembly thru the hole provided in the Wicking Post. The rope wick should slightly protrude from the bottom of the Wicking Post with the knot resting at the bottom of the Planter.

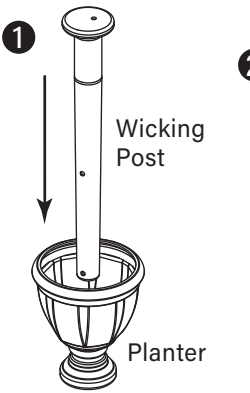

Step 3

Insert Wicking Post through the Pole Connector.

Step 4

Slide the black retaining washer over the Wicking Post up to the bottom of the Pole Connector. Insert hinge pin through hole in Wicking Post. Note: If your rope wick becomes unraveled and frayed at the ends, don't be concerned, it will still function as intended.

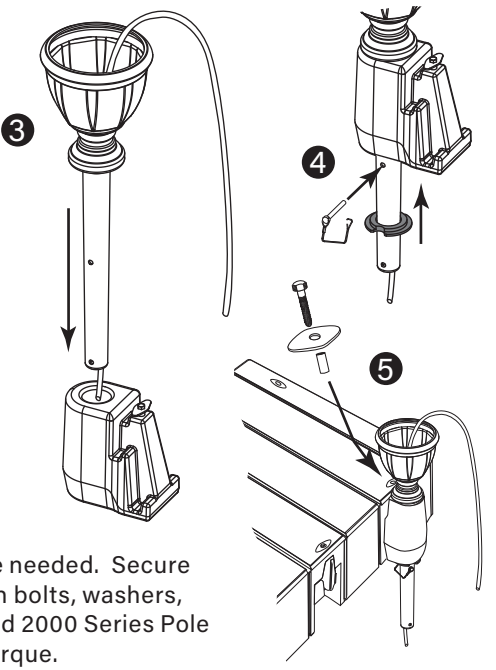

Step 5

Install Pole Connector into socket where needed. Secure Pole Connector into socket from top with bolts, washers, and bushings as shown. Tighten 1000 and 2000 Series Pole Connectors to 25 lbs/ft (3.46 kg/m) of torque.

Self Wicking Planter

Instructions for:

Self Wicking Planter (SWP1020)
Adding plants to installed Planter

With your Planter assembly attached to your dock, you are now ready to fill your Planter with your favorite plants.

Step 6

While filling the Planter with potting soil, coil the rope wick up thru the soil along the sides of the pot. ***Note: The rope wick should never be exposed above the soil as this will cause it to dry out. We recommend the last coil to be at least 1" (2.5 cm) below the soil's surface.***

Step 7

Add plants to Planter following the recommended planting instructions.

Step 8

Jump start the wicking system by flooding the Planter with water. The excess water will drain out thru the bottom of the Planter and the rope wick. After the excess water has drained, the rope wick will always provide the correct amount of moisture for plants to thrive.

Note: Although the soil may appear dry on the surface, the wicking system will always supply plants the moisture needed at the roots. Also, the wicking system will drain off the excessive water after a rain shower.

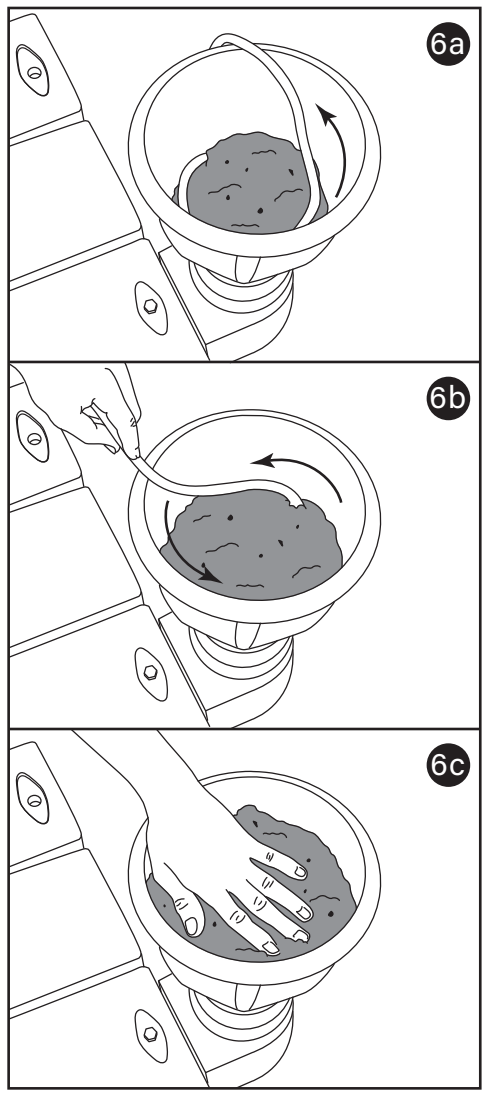

Note: Please exercise caution when using the planter in salt water environments. Check to make sure that the plants are salt water compatible before planting. If using in salt water, please check the wick for salt deposits and replace, if necessary.

2000 Series (HP) Bench & Armrests

Tools Needed

9/16" (16 mm) Socket wrench
Not available in metric

Hardware Included

Bench Hardware

(4) 2000 Versatile Connectors
(4) 3/8" x 3/4" Hex bolts
(4) Diamond washers



Armrest Hardware

(6) 3/8" x 1-1/4" Xylon coated bolt
(6) 3/8" Split lock washer
(6) 3/8" Flat washers
(6) Short bushings



Step 1

Position Bench over sockets on a fully installed 2000 series dock.

Step 2

Insert the 2000 Versatile Connectors into the corresponding dock sockets. Secure 2000 Versatile Connectors into socket from top with bolts and washers as shown. Tighten to 25 lbs/ft (3.46 kg/m) of torque. If attaching to dock where Connectors are already located, remove the bolts in the top
of the Connector and replace with 2-1/4" bolt and long bushing.
Note: A minimum of THREE (3) 2000 Versatile Connectors are required to securely attach bench to existing 2000 series dock system.

Step 3

Position the 3 holes of the left Bench Armrest with the 3 holes in the left side of the Bench. Secure with bolts, washers and short bushings. Install the right Bench Armrest using the same instructions.

Instructions for:

Bench & Armrests (BH2000)
Bench (BH2020)
Bench Armrests (BA2020)
Bench Hardware Kit (BHK2000)

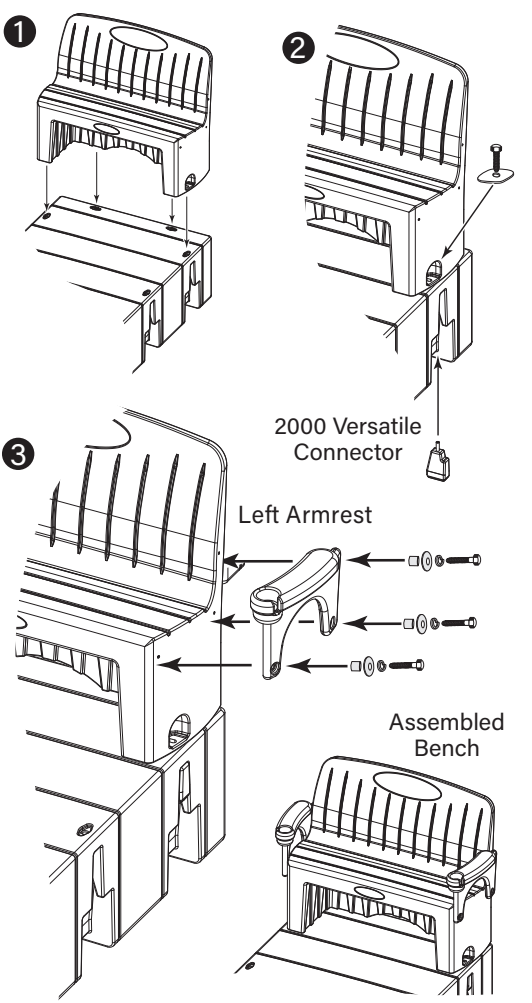

Note: Check all bolts every three months or as needed to insure all connector hardware is securely fastened.

1000 & 2000 Series Edge Bumper

Tools Needed

Drill - 1/8" (3.5 mm), 3/8" (9.5 mm) drill bit & 1" (25.5 mm) Wood bore bit
White or light color marker
9/16" (16 mm) Socket wrench
Saw

Materials Needed

4" x 3/8"-16 (10 cm x 10 mm) bolt, nut and washer -each hole drilled

Step 1

Determine location of Edge Bumper. Cut Edge Bumper at the end of Float Sections if needed. Algin with Dock edge and mark hole locations up thru float connector sockets. Straight Edge Bumper as needed to algin with dock edge.

Step 2

Drill the holes with 1/8" (3.5 mm) bit all the way thru the Edge Bumper.

Step 3

(A) Counter shink the holes with 1" (25.5 mm) Wood bore bit 1" (25.5 mm) deep on opposite side of hole location marks.
(B) Finish drilling holes with 3/8" (10 mm) bit all the way thru the Edge Bumper.

Step 4

Place Edge Bumper on dock section and bolt into place. Tighten all bolts in the Edge Bumper using 25 lbs/ft (3.46 kg/m) of torque.

Instructions for:

Edge Bumper (EB1020)

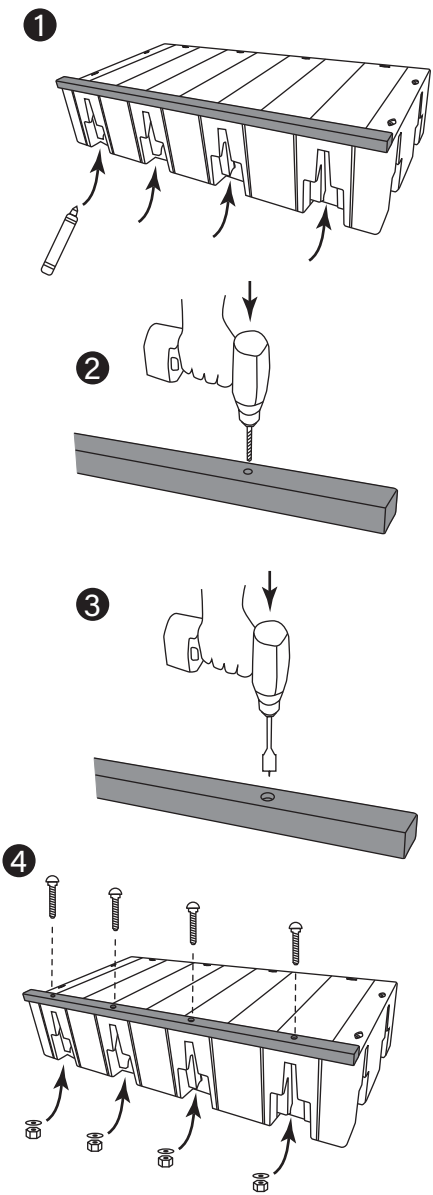

Pole Connector

Tools Needed

9/16" (16 mm) Socket wrench

Instructions for:

1000 Pole Connector (PC1010), (PC1010M)
2000 Pole Connector (PC2022),
(PC2022M), (PC2023), (PC2023M)
Pole Cover (PC1002)

Step 1

Determine the length of poles needed. Start with long poles and either drive further down or cut off tops after driving. Leave extra length above top of dock at high water elevation.

Step 2

Slip the Pole Connector over the top of the pole. Attach the Pole Connector to the dock in the desired location. Secure Pole Connectors into sockets with bolts, washers, and bushings as shown. Tighten the bolts using 25 lbs/ft (3.46 kg/m) of torque.

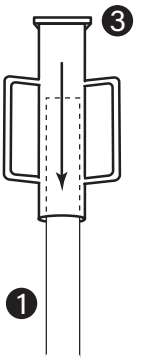

Step 3

Slip the open end of the Pole Pounder over the top of the pole. Grab each of the handles and raise the Pole Pounder up without clearing the top of the pole. Strike down on the top of the pole, and continue striking the pole until the predetermined depth is reached.
Pound almost to refusal.

Step 4

Cover those unsightly 2" (5.08 cm) anchor pole tops by slipping the Pole Cover over the top of the pole.

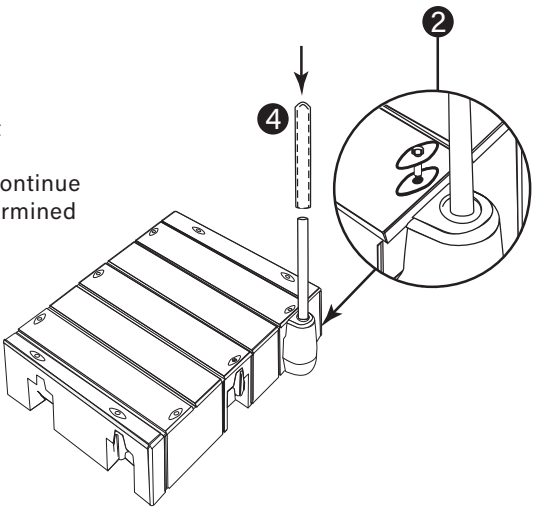

Note: Check all bolts every three months or as needed to insure all connector hardware is securely fastened.

Pole Auger & Pole Connector

Tools Needed

Drill and 5/16" (8 mm) Oversized drill bit
9/16" (16 mm) Socket wrench
Dowel

Hardware Included

5/16"-18 x 3" Stainless steel hex screw
5/16" Stainless steel nylon lock nut
Not available in metric

Step 1

Determine the length of poles needed. Start with long poles and either drive further down or cut off tops after driving. Leave extra length above top of dock at high water elevation.

Step 2

Insert the shaft of the auger into the lower end of the pole. Drill a hole all the way through the bottom of the pole and the shaft of the auger. Insert the hex screw provided and tighten with lock nut. Next, drill a hole all the way through the top of the pole.

Step 3

Slip the Pole Connector over the top of the pole. Attach the Pole Connector to the dock in the desired location. Secure Pole Connectors into sockets with bolts, washers, and bushings as shown. Tighten the bolts using 25 lbs/ft (3.46 kg/m) of torque.

Instructions for:

Pole Auger (PA1002)
1000 Pole Connector (PC1010), (PC1010M)
2000 Pole Connector (PC2022), (PC2022M), (PC2023), (PC2023M)

Pole Cover (PC1002)

Step 4

Insert a pin, dowel, or rod about 2' (60.96 cm) or longer into the previously drilled hole in the top of the pole. Turn clockwise to auger into the lake bed. To remove the pole, simply turn the pole counter clockwise.

Step 5

Cover those unsightly anchor pole tops by slipping the Pole Cover over the top of the pole.

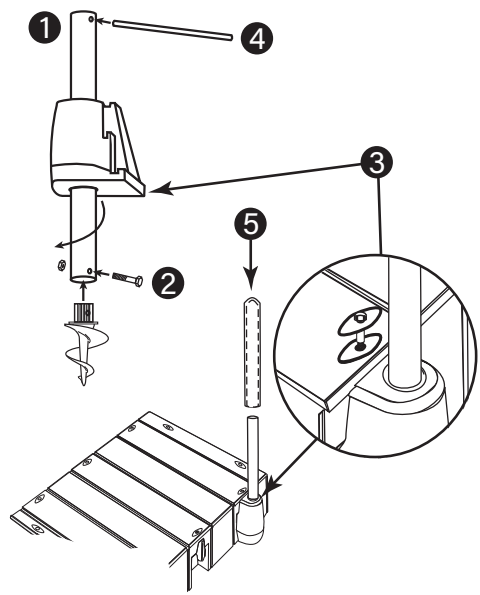

Note: Check all bolts every three months or as needed to insure all connector hardware is securely fastened.

Dead Man Collar

Tools Needed

9/16" (16 mm) Socket wrench
Small long rope for holding docks to shore.

Instructions for:

2" Dead Man Collar (DM1002)
2" Dead Man Collar (DM2002)
1000 Pole Connector (PC1010)&M
2000 Pole Connector (PC2022)&M

Items Not Included

1/4" (6.35 mm)Chain
3/8" x 3"-4" (10 mm x 10 cm)Bolt
3/8" (10 mm) Lock nut
(2) 3/8" (10 mm) Washers

Step 1

Attach the Pole Connector to the dock in the desired location. Secure Pole Connectors into sockets with bolts, washers, and bushings as shown. Tighten the bolts using 25 lbs/ft (3.46 kg/m) of torque.

Step 2

Slip the long end of the Dead Man Collar into the Pole Connector.

Step 3

Insert a weighted chain through the bottom of the Dead Man Collar. (Note: Use a heavy gauge wire bent into a hook to reach through the Dead Man Collar to pull the chain up the center). Fasten the chain by setting a link in the groove in the top of the collar.

Step 4

With the extra chain hanging down the side Pole Connector, put a bolt with a washer at its head through a link. Repeat adding links on to the bolt every few links to make a ball. Make the chain ball big enough so the chain can't pass through the Dead Man Collar. Add the washer and nut to hold chain ball in place.

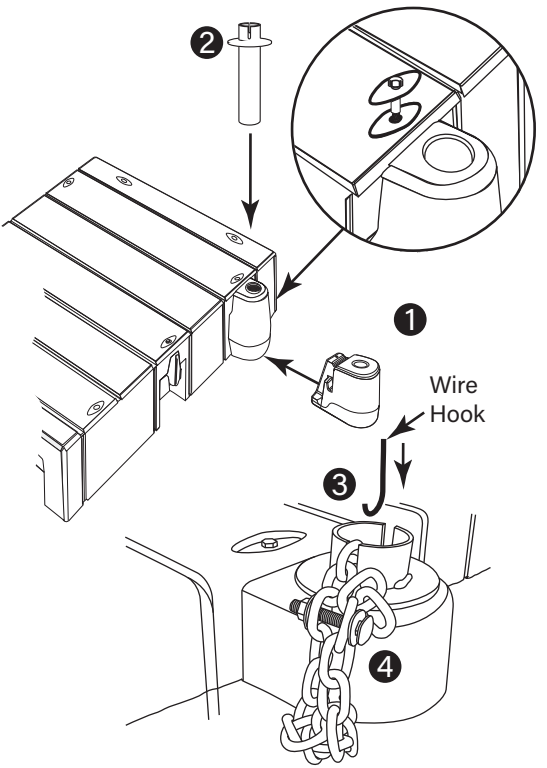

Note: Check all bolts every three months or as needed to insure all connector hardware is securely fastened.

Stiff Arm Fitting

Tools Needed

1/2″ (13 mm) Socket wrench
3/4″ (19 mm) Socket wrench
Long rope
Drill and 1/2″ (13 mm) bit

Before you begin: Determine the layout and location of your dock. Use the rope to hold dock to shore. Note: The shore anchors need to be equal height and distance to the water for the Stiff Arms to work properly.

Hardware Included

(3) 1/2″ x 2-1/2″ Hex screws
(3) 1/2″ Stainless steel nylon self locking Hex nuts
(3) 1/2″ Washers
Not available in metric

Hardware Needed

(1) 2″ id. (50Dn Sch 40) Galvanized pole
(4) 1/2″ x 3″ (13 mm x 8 mm) Bolts
(4) 1/2″ (13 mm) Lock nuts
(4) 1/2″ (13 mm) Washers
(2) 3/4″ x 3-1/2″ (19 mm x 9 cm) Bolts
(2) 3/4″ (19 mm) Lock nuts
(2) 3/4″ (19 mm) Washers

Instructions for:

Stiff Arm Bracket (SAB1020)
Stiff Arm Fitting (SAF1020)

Step 1

Have your shore anchor mounted in place (1a). Align Stiff Arm Bracket with shore anchor. Use 3 bolts for the 2000 Series docks and 2 bolts for the 1000 Series docks to align the holes in the Stiff Arm Bracket (1b).

Step 2

Place Stiff Arm Fitting with single end 12″ to 13″ (30.5 cm -33 cm) into pole. Drill two holes at least 6″ apart through Stiff Arm Fitting and pole. Use 1/2″ x 3″ (19 mm x 8 cm) bolts, washer and locknut to secure. Insert the double ended Stiff Arm Fitting in opposite end of pole. Make sure bolt holes for mounting to Stiff Arm Bracket and shore anchor are parallel.

Step 3

Attach single ended Stiff Arm Fitting to Stiff Arm Bracket at dock. Secure with 1/2″ (13 mm) bolt, washer and locknut (3a). Attach double ended Stiff Arm Fitting
to shore anchor. Secure with 1/2″ (13 mm) bolt, washer and locknut (3b).

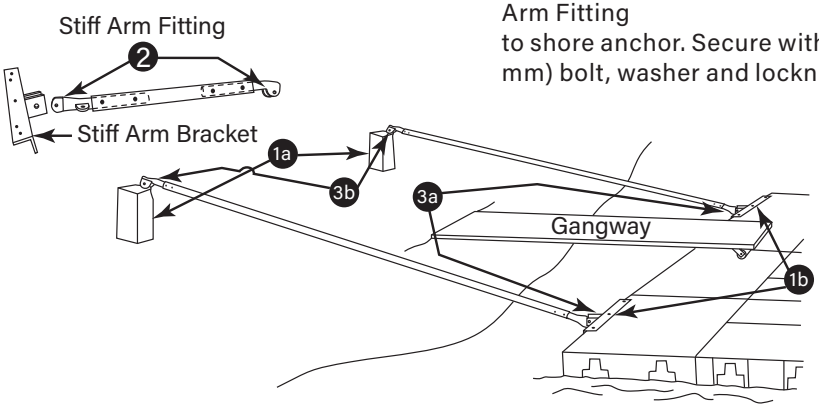

Deep Water Hardware

Tools Needed

2-3/4" Wrench
Not available in metric

Hardware Included

(2) 12" Eye bolts
(2) Diamond washers
(2) 1/2" Washers
(4) 1/2" Hex nuts
(2) 1/2" Acorn nuts

Step 1

Thread two 1/2" nuts down about 1-1/4" on each eye bolt and tighten them against each other.

Step 2

Place 12" eye bolts on opposite sides of platform or dock system. Add one 1/2" washer and insert eye bolt as shown.

Step 3

Place washer and acorn nut on eye bolt and tighten. Attach your anchoring system to the eye bolts.

Suggested Method

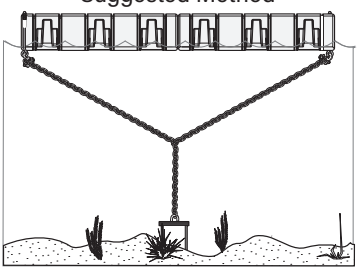

Instructions for:

Deep Water Hardware (DW1010)

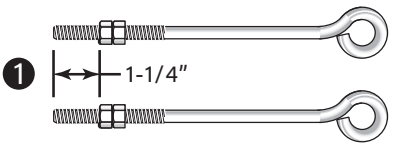

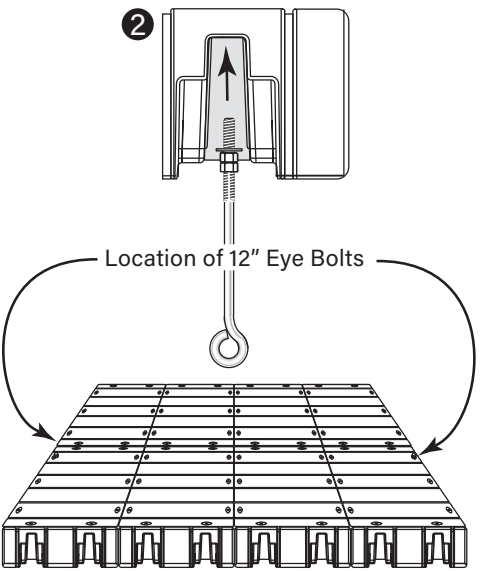

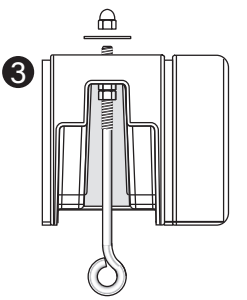

Note: Check all bolts every three months or as needed to insure all connector hardware is securely fastened.

Piling Loop

Tools Needed

3/4″ Deep socket wrench with 4″ extension
Long rope for holding docks to shore.
Not available in metric

Before you begin: Determine the layout and location of your dock. Use the rope to hold the dock in place. When possible, install Piling Bracket on land.

Hardware Included

(2) 1/2″ x 4″ Carriage bolts
(6) 1/2″ x 1-1/2″ Carriage bolts
(8) 1/2″ Nuts
(8) 1/2″ Washers

Step 1

Insert 1-1/2″ carriage bolts up through bottom of Piling Loop Bracket. Place Roller Kit over the bolts secure with washers and nuts (hand tighten only).

Step 2

Insert two 1-1/2″ carriage bolts in the top holes on the side of the Piling Loop Bracket. Secure bolts with nuts (hand tighten). Lock bolt into place by fitting square on bolt into slot.

Step 3

Set the Piling Loop Bracket on the edge of the dock. Align the holes for the series of dock installed (1000 Series inner holes and 2000 Series outer holes). Insert two 4″ carriage bolts. Secure with washers and nuts.

Instructions for:

Piling loop (PL1010), (PL1012) (PL1014), (PL1016), (PL1018)

Step 4

Remove the two nuts from the side of the Piling Loop Bracket, with the bracket secured to the dock the carriage bolts will be held in place (4a). Place the Piling Loop around the piling. Secure the top carriage bolts with washers and nuts. Insert the lower two 1-1/2″ carriage bolts and secure with washers and nuts (4b).

Step 5

Center the Roller Kit with the piling and tighten the nuts securely.

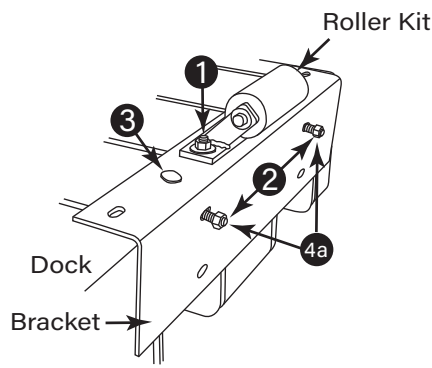

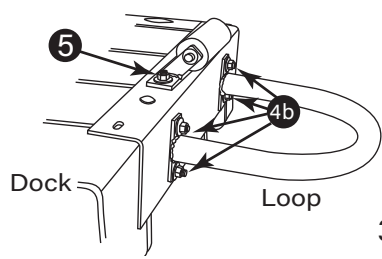

Tools Needed

(1) 9/16" Wrench

Instructions for:

2000 Series Attachment Kit

Step 1

Determine port location (Front or Side). Insert 2000 Series XL6 Connectors into float section connector slots.

Step 2

Secure with bolts, washers, and bushings. Tighten all bolts in the XL6 using 25 lbs/ft (3.46 kg/m) of torque.

Step 3

Continue by hooking the XL over the 2000 Series XL Connectors, shift your body weight to the XL.

Step 4

Secure with bolts, washers, and bushings. Tighten all bolts in the XL using 25 lbs/ft (3.46 kg/m) of torque.

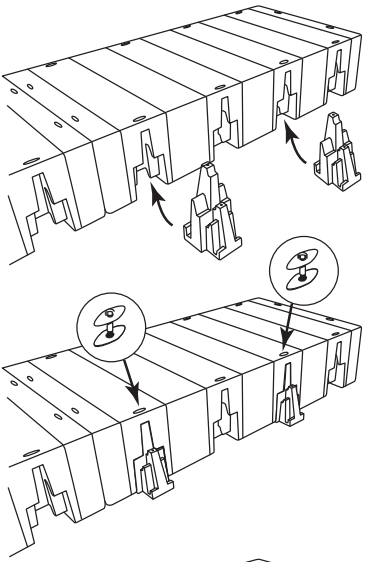

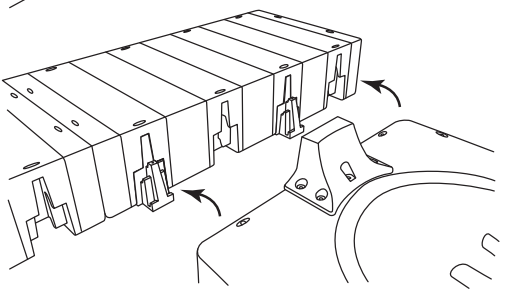

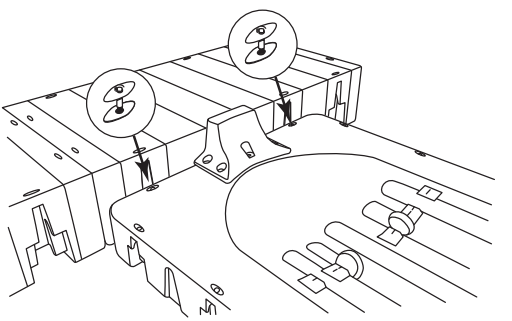

Connect-A-Port XL5 & XL6 Fixed Dock

Tools Needed

9/16" Wrench
Pole Pounder

Instructions for:

Connect-A-Port XL5 & XL6
Front or Side Mounting

Step 1

Slip the XL Pole Connectors into each of the connector slots.

Step 2

Secure each connector with bolt, diamond washer and spacer. Tighten all bolts using 25 lbs/ft (3.46 kg/m) of torque.

Step 3

You will need a pipe long enough to drive into the ground. If you have a very secure fixed dock you can mount the pipe to the dock, but if the dock is not of the best integrity mounting to the dock is not recommended because it can work the dock loose in a high wake area. It is recommended that you drive the pipe in the ground and mount it to a fixed dock if applicable. Note: pipe size 2" sch 40 pipe or max dia of 2.375". (50 Dn mm sch 40).

1

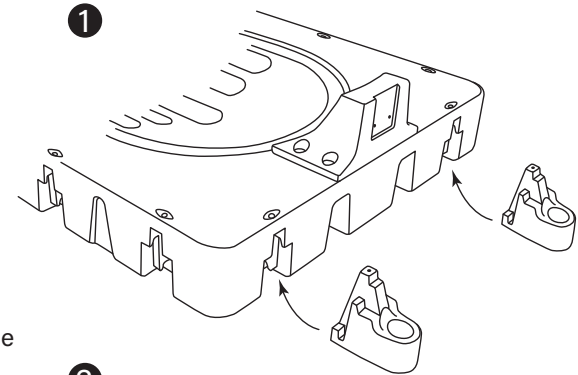

2

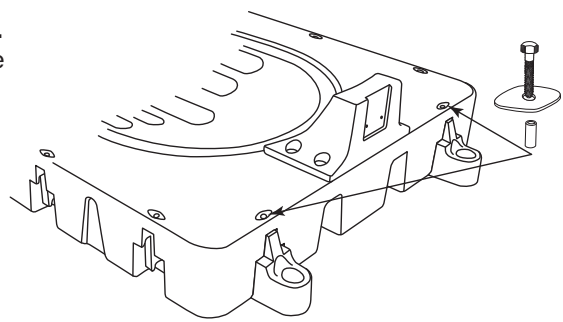

Connect-A-Port XL5 & XL6 Floating Dock

Tools Needed

(1) Drill - 1/4" (6.5 mm) & 7/16" (11 mm) drill bit
(1) 3/4" (18 mm) Wrench
(2) 9/16" Wrench *Not available in metric*

Instructions for:

Connect-A-Port XL5 & XL6
Front or Side Mounting

Step 1

Slip the XL Floating Dock Connectors into each of the connector slots.

Step 2

Secure each connector with bolt, diamond washer and spacer. Tighten all bolts using 25 lbs/ft (3.46 kg/m) of torque.

Step 3

(a) Insert the hinge black bushing into the XL Hinge Connector. (b) Place the Metal Dock Channel over the XL Hinge Connector and align to the hole needed for your dock height.
(c) Insert the Hitch Pin thru the Metal Dock Channel and XL Hinge Connector. (d) Secure with Hairpin Cotter clip.

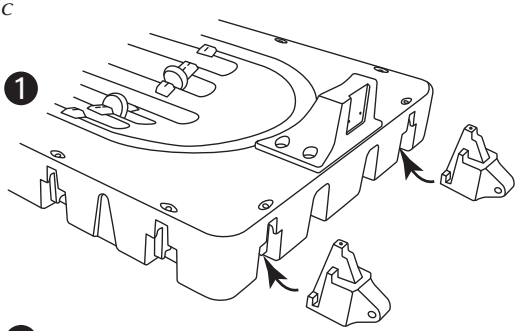

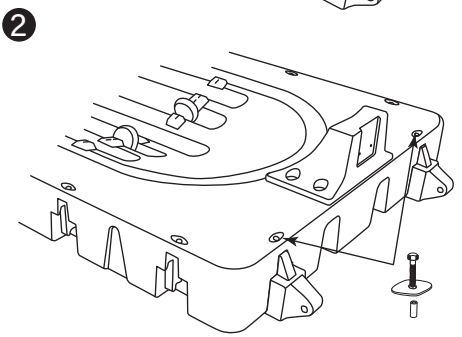

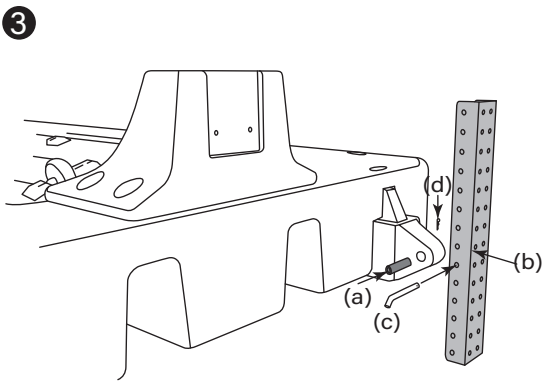

Step 4

(a) Determine XL mounting location. You may want to put your PWC on the port at this time to see how the float set in the water. The entrance end of the port is high with the craft on it you will want to raise the front of the port to give is a slight downhill appearance for easy roll off. Remember, if it rolls off too hard the mount is too low. IF it rolls off too easy it is too high.
(b) Mark the drill holes and remove Metal Dock Channel for mounting on the dock. Recommended 4 to 6 mounting holes.

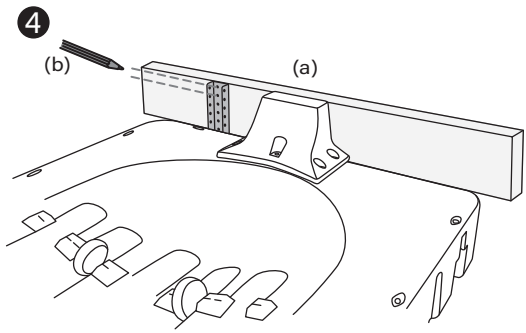

Step 5

Hardware to mount the XL Hinge Connector not included.
Attaching with Lag Bolts:
Mark location for Drilling the (4) 1/4" Pilot holes. Drill the holes.
Use 9/16" Wrench to install the 3/8" Lag Bolts.

Attaching with Bolts, Nuts & Washers:
Mark location for Drilling the (4) 9/16" Pilot holes. Drill the holes.
Use 3/4" Wrench to install the 1/2" Bolts, Nuts & Washers.
(a) Drill the holes for the Bolts. (b) Align Metal Dock Channel to the dock and secure with hardware.

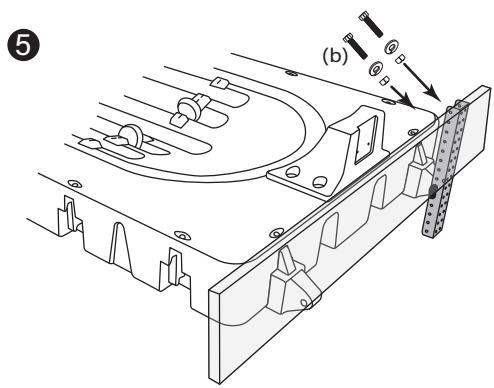

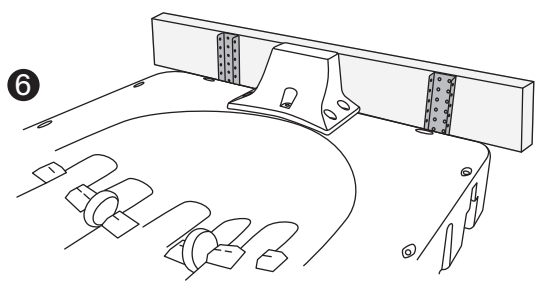

Step 6

Repeat Steps 3 to 5 for the other anchoring connection.

Note: If mounting port to wooden floating dock use 3/8" (9 mm) Lag Bolts (screw based)

Connect-A-Port XL5 & XL6 Side By Side

Tools Needed

(1) 9/16" Wrench

Step 1

Slip the XL6 Side By Side Connectors into each of the three connector slots.

Step 2

Secure each connector with bolt, diamond washer and spacer. Tighten all bolts using 25 lbs/ft (3.46 kg/m) of torque.

Step 3

Align the next XL6 with the Side By Side Connectors. Position yourself carefully on the XL6 with the connectors. Continue adding the next XL6 by placing them over the Side By Side Connectors.Shift your body weight to the new XL6.

Step 4

Secure each connector with bolt, diamond washer and spacer. Tighten all bolts using 25 lbs/ft (3.46 kg/m) of torque.

Instructions for:

Connect-A-Port XL5 & XL6
Front or Side Mounting

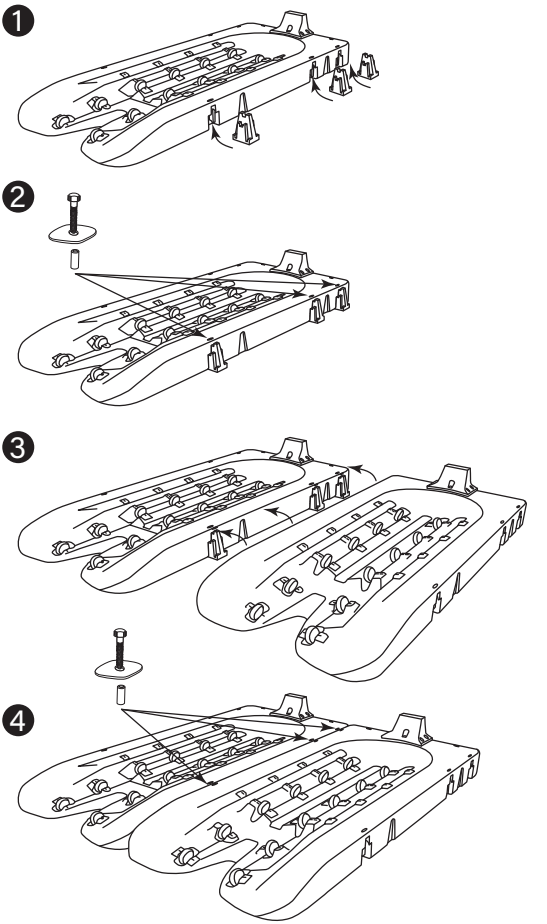

Note: Check all bolts every three months or as needed to insure all connector hardware is securely fastened.

Connect-A-Port XL5 & XL6 Bow Stop

Tools Needed

(2) 9/16" Wrenches

Instructions for:

Connect-A-Port XL5 & XL6

Step 1

(a) Insert the bolt into the washer and cable loop. Then put the bolt in the hole of the Bow Stop. (b) Secure the bolt with washer and nut from the underside of the Bow Stop.

Step 2

(a) Align the Bow Stop's feet with the XL6 with the flat side to the outside of the port. (b) Insert the bolt and washer into the four connection points. (c) Secure the Bow Stop with washer and nut from the underside of the XL6.

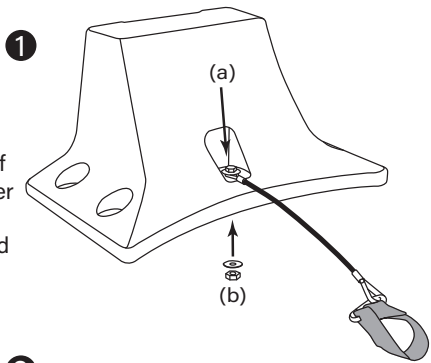

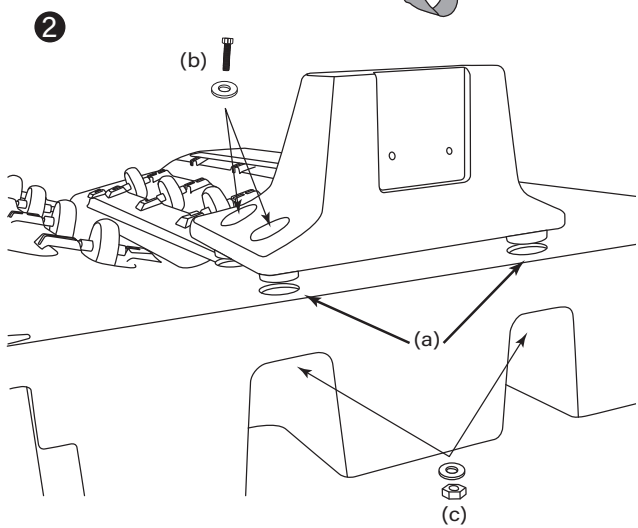

Connect-A-Port XL5 & XL6 Move Rollers

Tools Needed

(1) Small Pry Bar
(1) Dead Blow Hammer

Step 1

(a) Insert the Pry Bar under the wheel axial. (b) Pry upward to release the axial from the port.

Step 2

(a) Align the roller axle assembly to port roller slot. Secure with a Dead Blow Hammer by tapping the axial on both sides of the roller. The axial should snap into place.

Wheel Parts

(a) Roller
(b) Axle
(c) Spacer
(d) Axial Cap

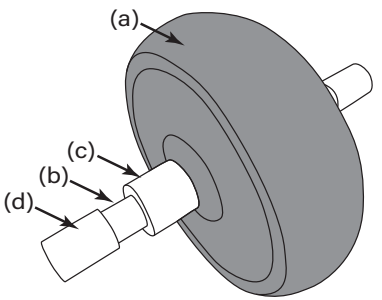

Instructions for:

Connect-A-Port XL5 & XL6
Front or Side Mounting

❶

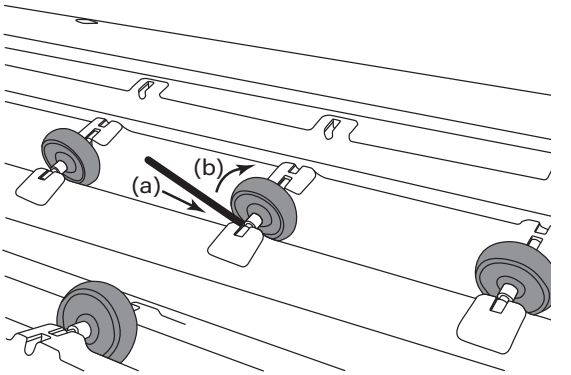

❷

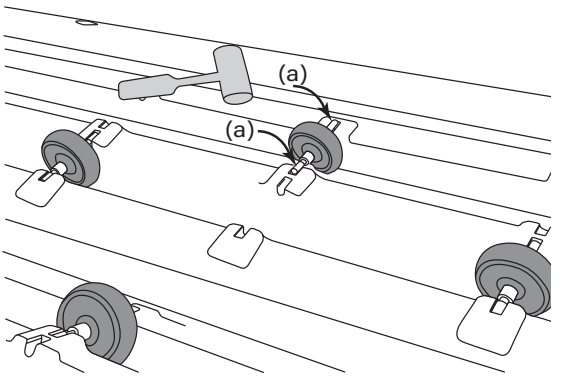

YAKport Fixed Dock

Tools Needed

(2) 9/16" Wrench

Step 1

Install Pole Connectors into outer YAKport sockets.
Secure Float Connectors into sockets with bolts, washers, and bushings provided. Tighten all bolts in the dock using 25 lbs/ft (3.46 kg/m) of torque.

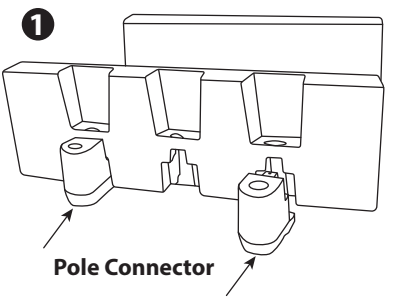

Step 2

Determine YAKport position to fixed dock. (A) Mount one Pole Sleeve Bracket on the outside of the fixed dock. *Note: 3/8" hardware to mount the Pole Sleeve Bracket not included*.
(B) Slide 2" id pole through Pole Sleeve Bracket and Pole connector.
Note: pipe size 2"id sch 40 pipe or max dia of 2.375". (50 Dn mm sch 40)

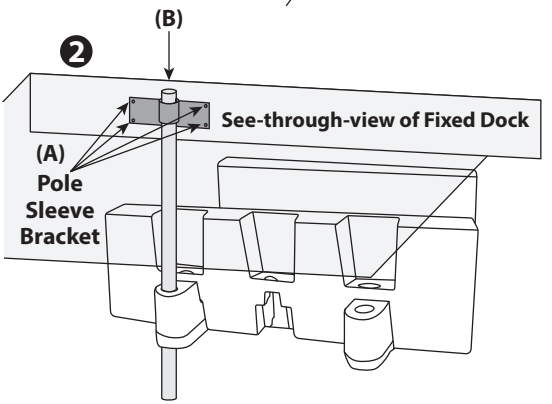

Step 3

(A) Slide 2" id pole through Pole Connector.
(B) Slide the Pole Sleeve Bracket down the 2" id Pole and align with the Fixed Dock. Mount Pole Sleeve Bracket to the Fixed Dock with 3/8" hardware.
Note: pipe size 2" is 30" on center between the Pole Sleeve Brackets.

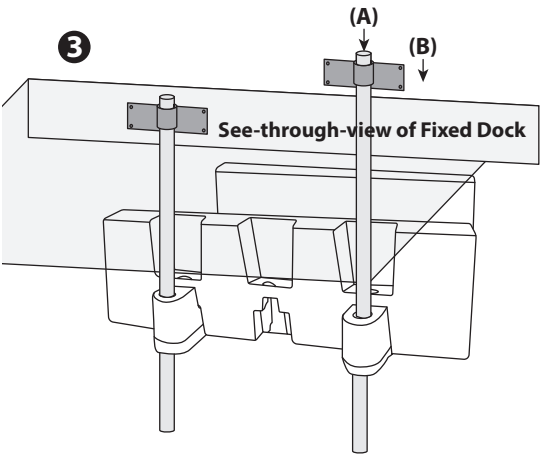

YAKport Floating Dock Kit

Tools Needed

(1) 9/16" Wrench
(1) Drill
(1) 1/2 Drill Bit

Step 1

Insert the Metal Accessory Connector-Male into the YAKport connector sockets. Secure with 3/8" Bolt, Diamond Washer & Bushing.

Step 2

Connect the Hinge Bracket to the Metal Accessory Connector-Male with the Pin & Clip.

Step 3

Align the Hinge Brackets up the floating dock & mark the hole location to be drilled. Discontent Hinge Bracket from the Metal Accessory Connector-Male.

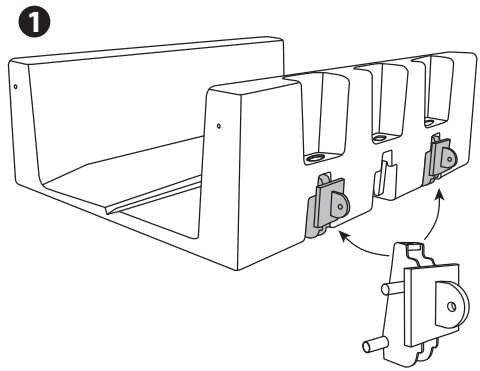

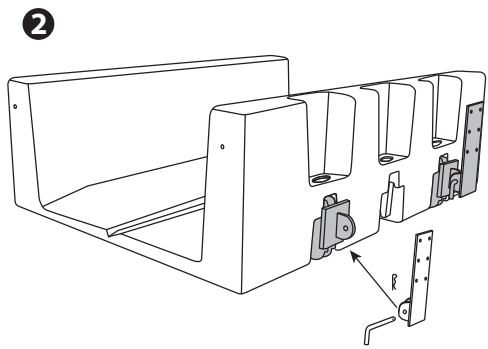

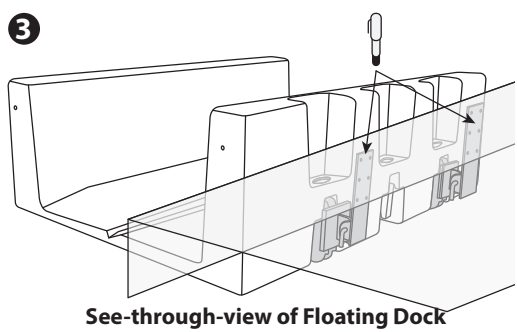

See-through-view of Floating Dock

YAKport Floating Dock Kit - High Profile

Tools Needed

(1) 9/16" Wrench
(1) 3/4" Wrench
(1) Drill
(1) 1/2 Drill Bit

Step 1

Attach the 5 x 5 Hinge Male to the Metal Accessory Connector with 1/2-13 Carriage Bolt, Washer & Nut.

Step 2

Insert the Metal Accessory Connector into the Yakport connector sockets. Secure with 3/8" Bolt, Diamond Washer & Bushing.

Step 3

Connect the Hinge Bracket to the 5 x 5 Hinge Male with the Pin & Clip.

❶

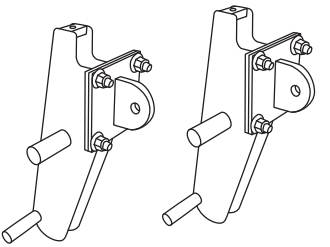

❷

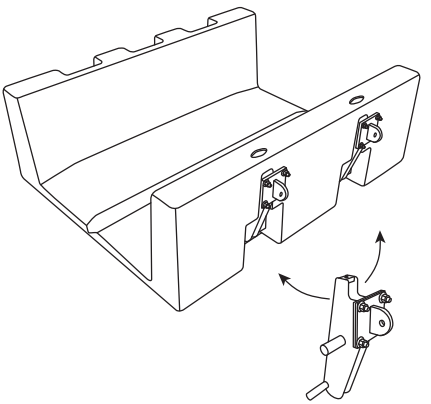

❸

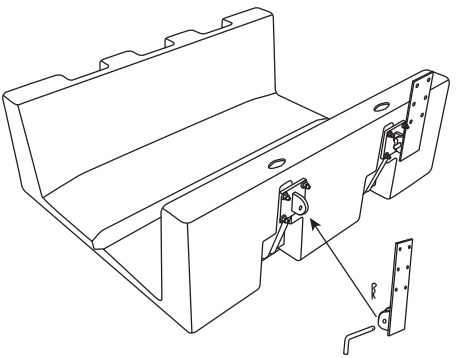

Tools Needed

(1) 9/16" Wrenches

Step 1

Install Float Connectors into all Float Section sockets.
1000 Series three Float Connectors
2000 Series two Float Connectors
Secure Float Connectors into sockets with bolts, washers, and bushings provided (hand tighten only).

Step 2

Align YAKport Launch with the Float Connectors. Position yourself carefully on the YAKport.

Step 3

Secure the YAKport Launch with bolts, washers, and bushings provided (hand tighten only). Tighten all bolts in the dock using 25 lbs/ft (3.46 kg/m) of torque.

❶

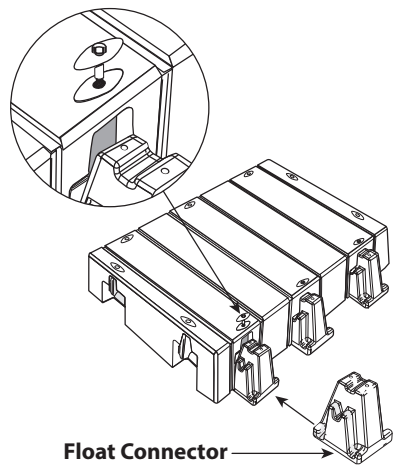

❷

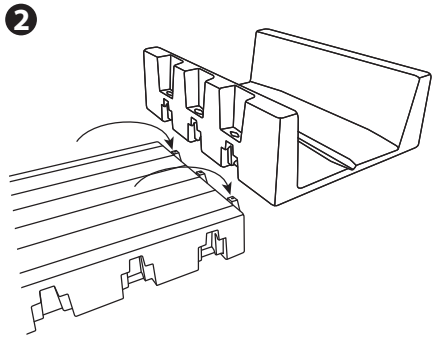

❸

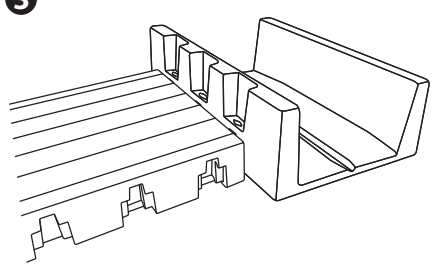

YAK Bars

Tools Needed

(1) 9/16" Wrenches

Step 1

Place the YAK Bars in the desired location on the YAKport launch.

❶

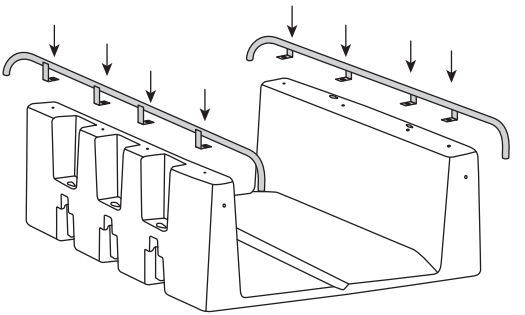

Step 2

Secure with the supplied (4) 3/8-16 x 1" bolts, lock washer & washer.

❷

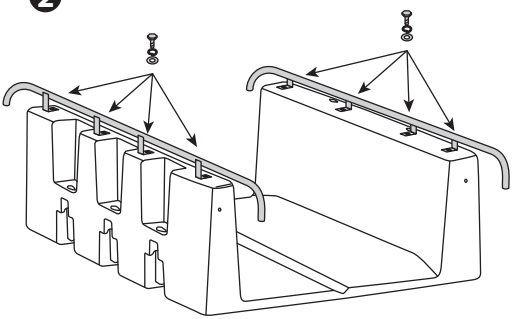

Overhead Bar / Grab Bars

Tools Needed

(1) 9/16" Wrench
(1) 9/16" Socket Wrench with an extension

Step 1

(a) Insert a 3/8-16 x 1" bolt with a lock washer & washer into the Overhead Bar/Grab Bar Bracket. (b) Hold the bolt in place with the Socket Wrench and align bolt with the insert in the YAKport. Don't tighten the bolt at this time.

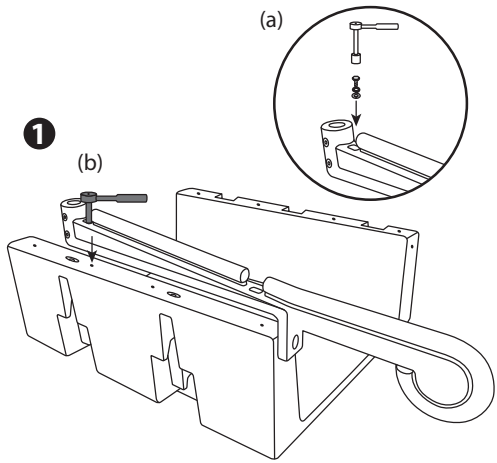

Step 2

(a) Insert the supplied 3/8-16 x 1" bolts into the top location, lock washer & washer. Don't tighten the bolt at this time. (b) Secure the front location with the supplied 3/8-16 x 1" bolts, lock washer & washer. (c) Tighten all three bolt locations to secure the bracket.

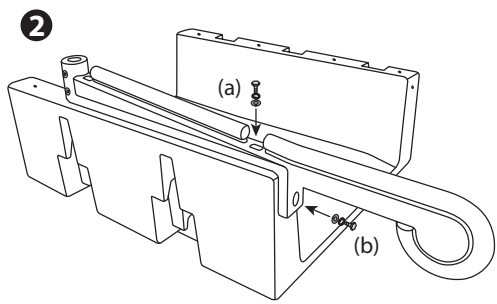

Step 3

(a) Insert the metal Overhead Bar into the Overhead Bar/Grab Bar Bracket. (b) Insert the four 3/8-16 x 4" bolt with a washer from the inside of the YAKport. (c) Secure with a washer, lock washer and nut.

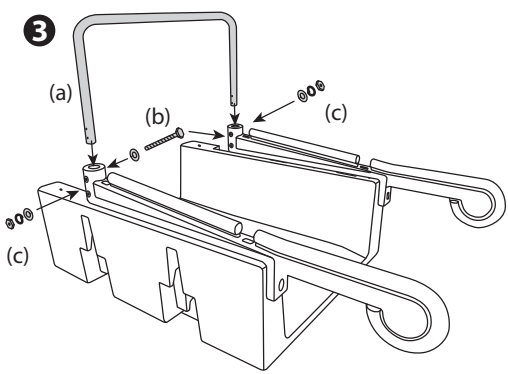

Warranty

connectadock.com

CONNECT-A-DOCK® Warranty — USA & Canada

Connect-A-Dock warrants to the original owner all polyethylene plastic components for ten (10) years for recreational use and three (3) years for commercial use from date of purchase to be free of defects in material and workmanship and to perform properly under normal usage and when *fully assembled according to the instructions provided at the time of purchase. All other accessories have a one (1) year limited warranty. *Fully assembled: Install float connectors into all float section sockets where other float sections will be attached. For a copy of the Connect-A-Dock complete warranty visit connectadock.com.

CONNECT-A-DOCK® Warranty — International

Connect-A-Dock warrants to the original owner all polyethylene plastic components for two (2) years for recreational use and one (1) year for commercial use from date of purchase to be free of defects in material and workmanship and to perform properly under normal usage and when *fully assembled according to the instructions provided at the time of purchase. All other accessories have a one (1) year limited warranty. *Fully assembled: Install float connectors into all float section sockets where other float sections will be attached. For a copy of the Connect-A-Dock complete warranty visit connectadock.com.

CONNECT-A-PORT® Warranty — USA & Canada

Connect-A-Dock warrants to the original owner all polyethylene plastic components for eight (8) years for recreational use and two (2) years for commercial use from date of purchase to be free of defects in material and workmanship. For a copy of the Connect-A-Port complete warranty visit connectadock.com.

CONNECT-A-PORT® Warranty — International

Connect-A-Dock warrants to the original owner all polyethylene plastic components for two (2) years [one (1) year for commercial use] from date of purchase to be free of defects in material and workmanship. All other accessories have a one (1) year limited warranty. For a copy of the Connect-A-Port complete warranty visit connectadock.com.

YAKport Warranty — USA & Canada

Connect-A-Dock warrants to the original owner all polyethylene plastic components for eight (8) years for recreational use and two (2) years for recreational use from date of purchase to be free of defects in material and workmanship.

YAKport Warranty — International

Connect-A-Dock warrants to the original owner all polyethylene plastic components for two (2) years one (1) year for commercial use] from date of purchase to be free of defects in material and workmanship. All other accessories have a one (1) year limited warranty. For a copy of the YAKport complete warranty visit connectadock.com.

1501 Owner Avenue, Atlantic, IA 50022 USA

1-877-742-3071 (toll free U.S.A. only)