ITEM NO.	P/N	Description	QTY.
1	BPPR	BACKPLATE	1
2	HKHK	HOOK	1
3	BL1T-12	BALL	1

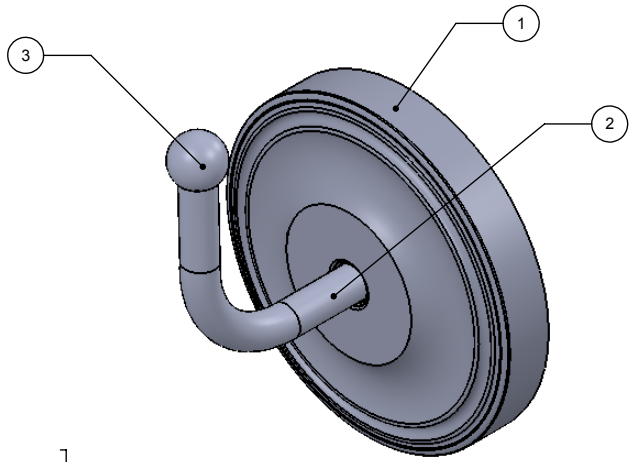

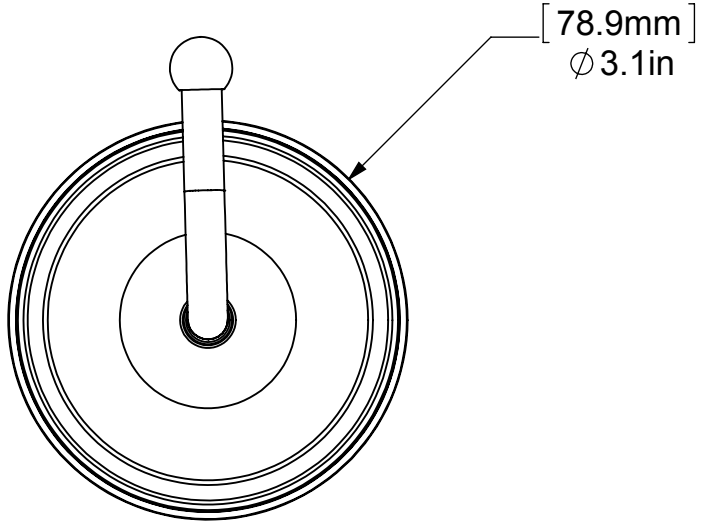

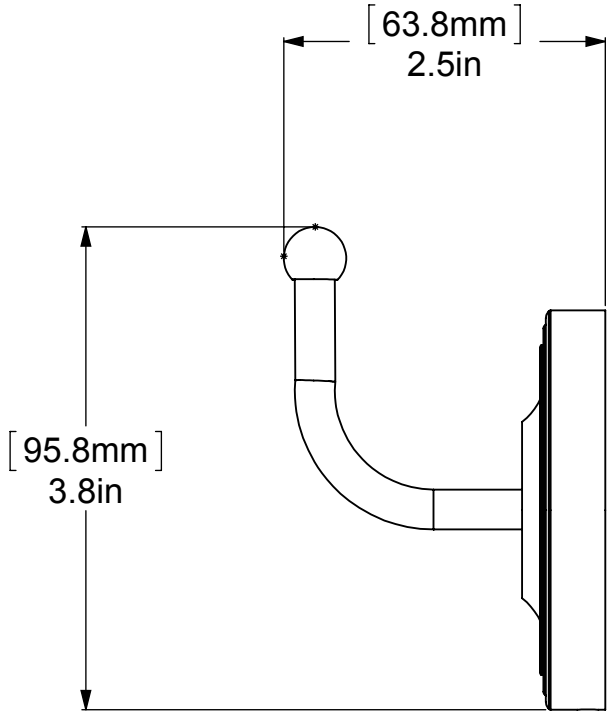

UNLESS OTHERWISE STATED	
.X	±.3mm
.XX	±.15mm
.XXX	±.008mm

COPYRIGHT © Allied Brass 2019

THIRD ANGLE PROJECTION

DRAWN	1-8-19	I.M
CHECKED	1-8-19	P.D
APPROVED	1-8-19	R.A

MATERIAL: BRASS

DESCRIPTION: ROBE HOOK

ALLIED BRASS INC.

FINISH	TBD
QUANTITY	TBD
DRAWING No.	R-H1
REV	0
SCALE	1:1.5
SHEET: 01	A4