R-H1

INSTALLATION INSTRUCTIONS

Step 1: Drill holes in Wall for screw anchors and attach Mounting Plate to Wall

Determine your desired location for installation and make a mark for the location of the mounting plate. Remove mounting plate from backplate by loosening set screw in backplate as pictured below. Place center hole of mounting plate over mark made above. Make 2 marks where mounting screws will be placed as shown below. Drill hole at each of the marks. (You may substitute other style mounting anchors or screws if desired). Place anchors into the holes made. Place mounting plate over holes and secure to mounting surface using screws as shown below.

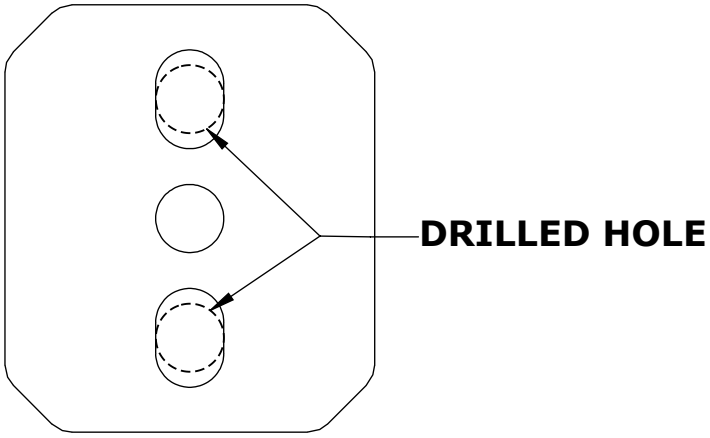

M

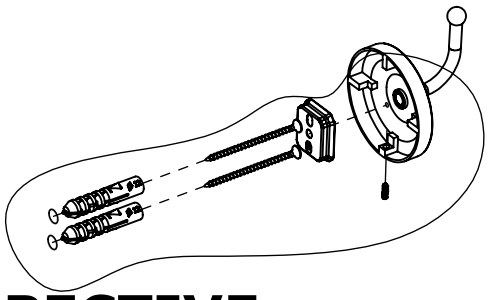

PERSPECTIVE

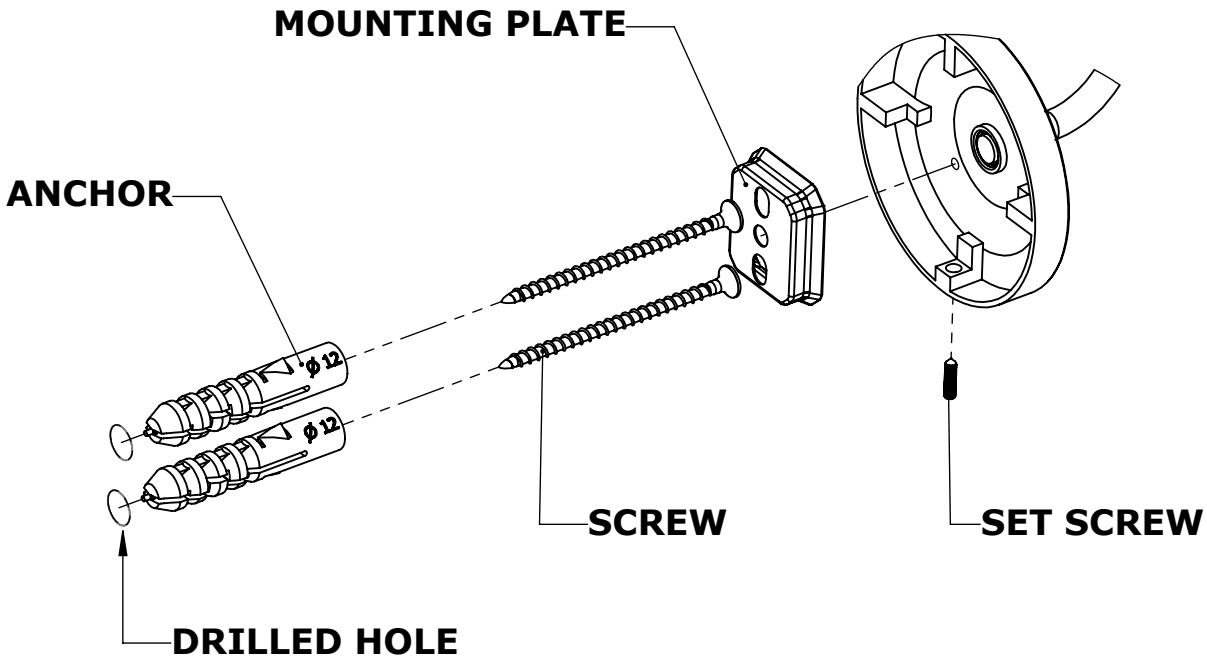

DETAIL M

No portion of this document or any artwork contained herein should reproduced in any way without the written conset of ALLIED BRASS INC.

R-H1

INSTALLATION INSTRUCTIONS

Step 2: Attach Bracket to Mounting Plate.

Place bracket on mounting plate and secure by tightening set screw as shown below.

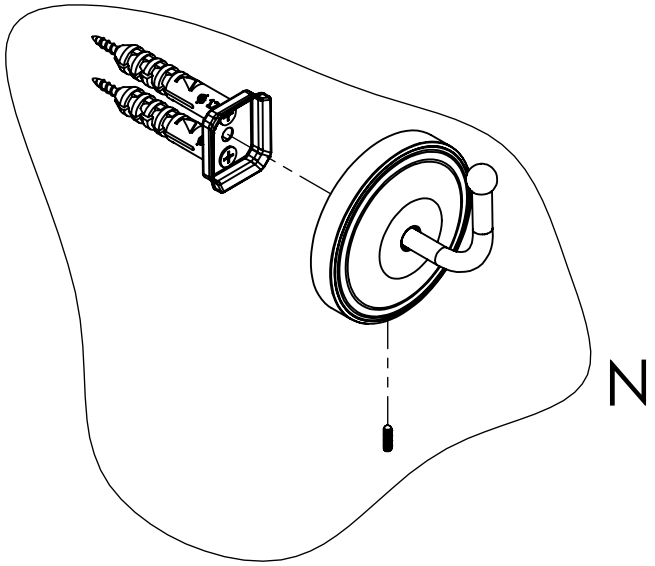

PERSPECTIVE

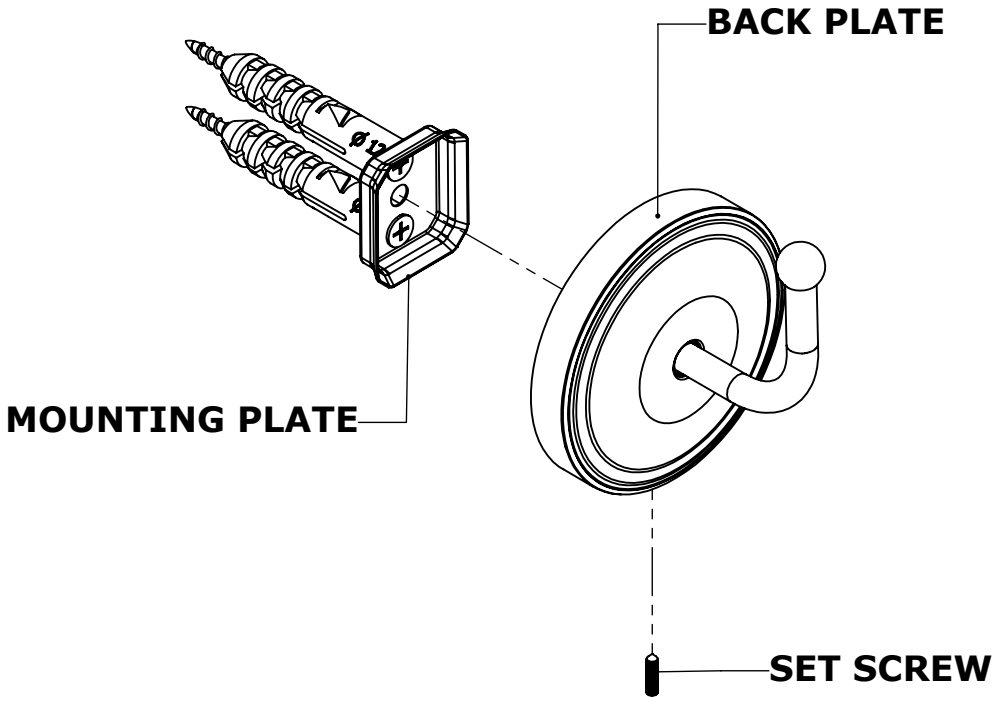

DETAIL N

No portion of this document or any artwork contained herein should reproduced in any way without the written conset of ALLIED BRASS INC.