American Standard

INSTALLATION INSTRUCTIONS

Berwick® Boulevard®
Pressure Balancing Bath and Shower Trim Kit

TU430500
TU430501
TU430502
TU431500
TU431501
TU431502

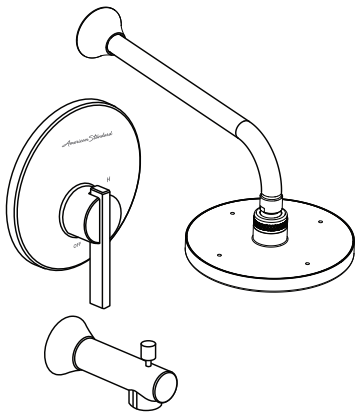

Thank you for selecting American Standard... the benchmark of fine quality for over 140 years.

To ensure that your installation proceeds smoothly-please read these instructions carefully before you begin.

For use with shower heads rated at 4.9 L/min (1.3 gpm) or higher.

RECOMMENDED TOOLS

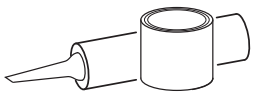

Plumbers' Putty or Caulking



Teflon Tape

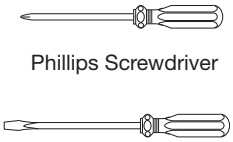

Phillips Screwdriver

Flat Blade Screwdriver



Adjustable Wrench



Channel Locks

ROUGHING-IN DIMENSIONS

- To assure proper positioning in relation to wall. Note roughing-in dimensions.

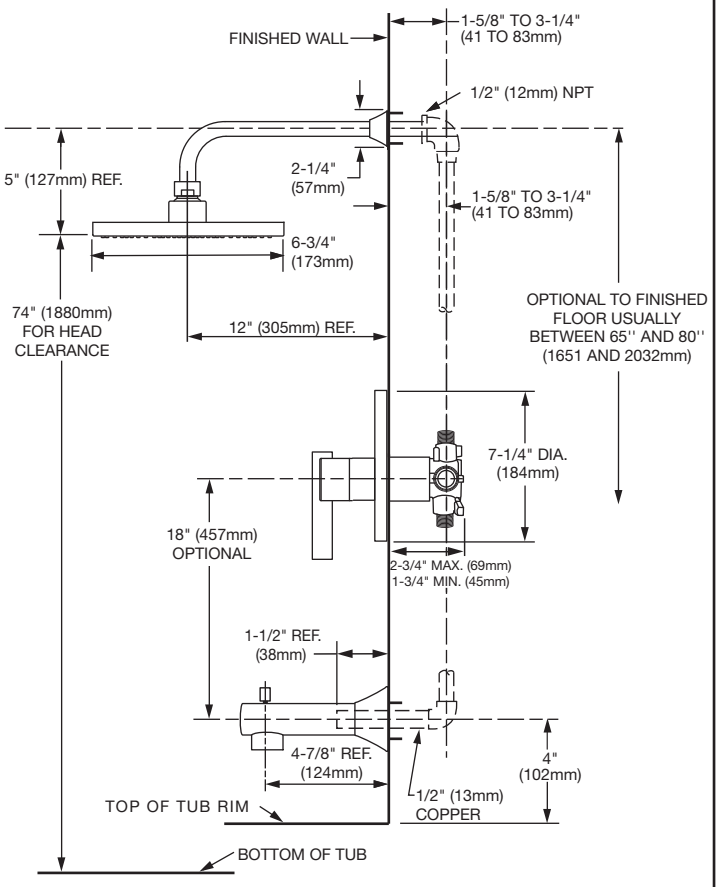

1 CARTRIDGE INSTALLATION

- Remove PLASTER GUARD **(6)** (Keep it installed for thin wall Installation).
- Remove BONNET NUT **(1)** by unthreading it Counter clockwise. Remove test CAP **(2)**.
- Remove PROTECTIVE HOUSING **(3)** from CARTRIDGE **(4)**. Install with "UP" text on top.
- Reinstall BONNET NUT **(1)** onto VALVE BODY **(5)** and tighten firmly with 12 Nm or 9 lbs/ft.

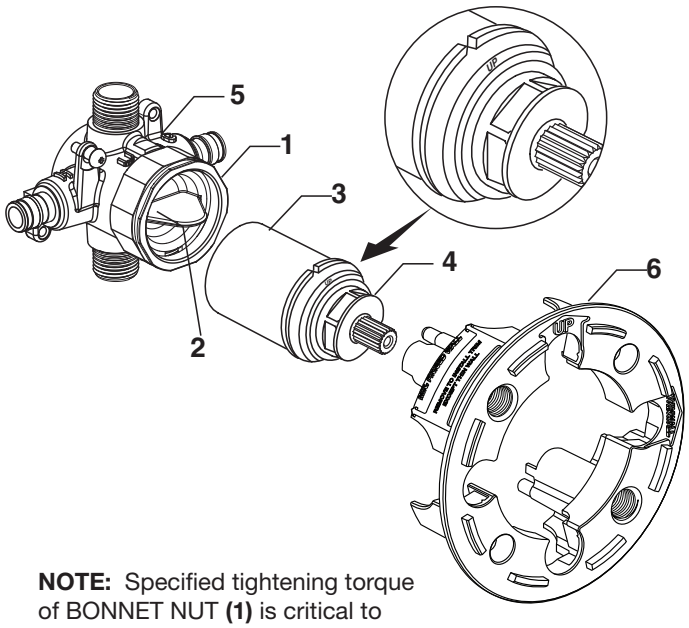

NOTE: Specified tightening torque of BONNET NUT **(1)** is critical to assure sealing function.

Product names listed herein are trademarks of AS America, Inc.
© AS America, Inc. 2018

M965941 (8/18)

2 INSTALL VALVE TRIM (STANDARD WALL INSTALLATION)

- ***Figure 1.*** Push CAP **(1)** over VALVE CARTRIDGE **(2)** until seated against stop.
- ***Figure 2.*** Make sure O-RING **(6)** is secure within ESCUTCHEON HOLDER **(3)**. Push ESCUTCHEON HOLDER **(3)** onto CAP **(1)** and attach with LONG SCREWS **(4)**. Mount ESCUTCHEON SUPPORT **(5)** to ESCUTCHEON HOLDER **(3)** with 4 SHORT SCREWS **(8)**.
- ***Figure 3.*** Install ESCUTCHEON **(7)** onto CAP **(1)** and push flush against finished wall. ESCUTCHEON **(7)** will snap fit onto ESCUTCHEON SUPPORT **(5)**.

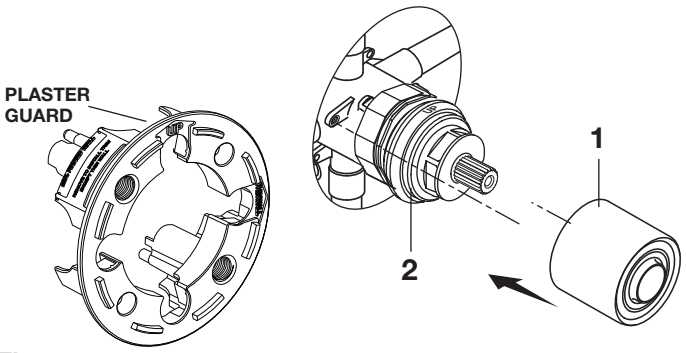

Figure 1.

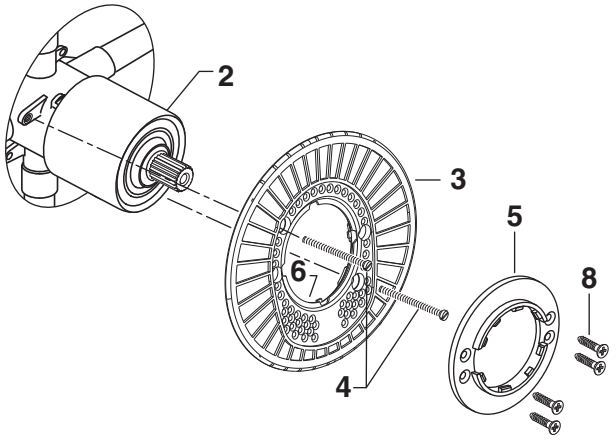

Figure 2.

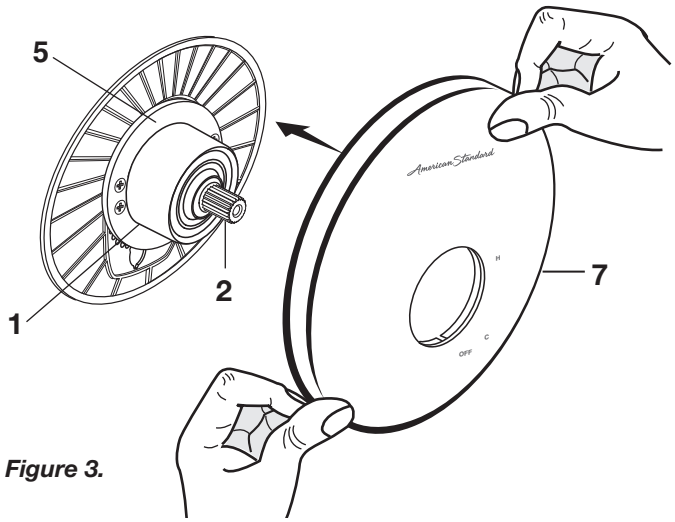

Figure 3.

2a INSTALL VALVE TRIM (THIN WALL INSTALLATION)

Note: Plaster Guard will remain installed for thin wall installation.

- ***Figure 1.*** Remove LONG SCREWS **(4)**, push CAP **(1)** over VALVE CARTRIDGE **(2)** until seated against stop. ***Note: Escutcheon Holder must be installed with number facing out on bottom.***
- ***Figure 2.*** Make sure O-RING **(5)** is secure within ESCUTCHEON HOLDER **(3)**. Push ESCUTCHEON HOLDER **(3)** onto CAP **(1)** and attach with LONG SCREWS **(4)**.
- ***Figure 3.*** Install ESCUTCHEON **(6)** onto CAP **(1)** and push flush against finished wall. Escutcheon **(6)** will snap fit onto ESCUTCHEON HOLDER **(3)**.

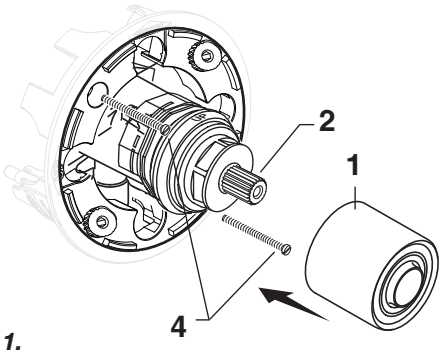

Figure 1.

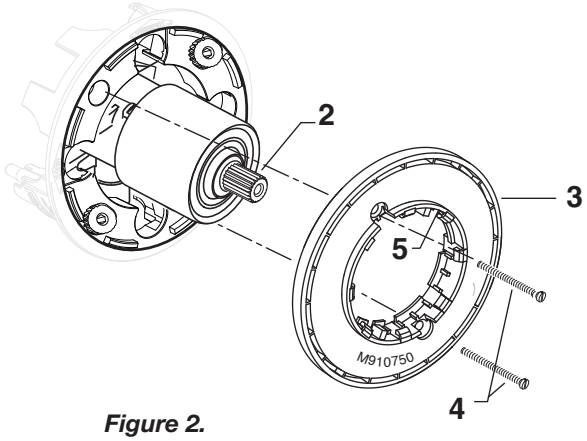

Figure 2.

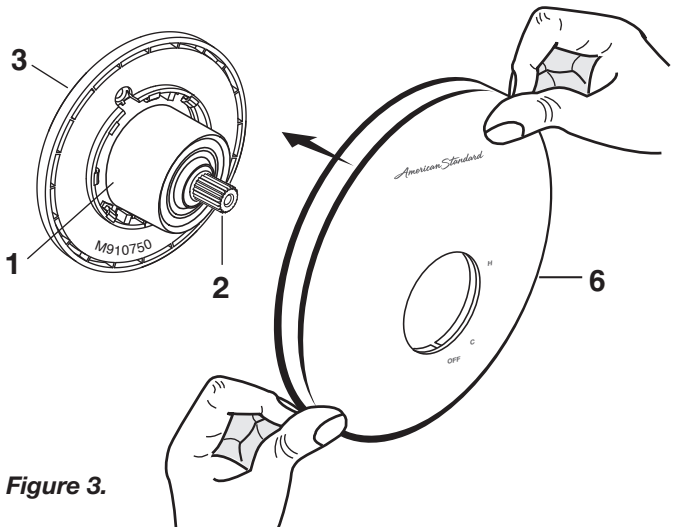

Figure 3.

M965941 (8/18)

3 INSTALL, TUB SPOUT, SHOWER HEAD, SHOWER ARM WITH FLANGE

CAUTION **Protect finish on SHOWER HEAD and TUB SPOUT when installing.**

Note: Apply sealant or Teflon Tape to shower arm.

- Remove PIPE PLUG and CAP **(1, 2)** from shower pipe and tub filler pipe.
- Install SHOWER ESCUTCHEON **(3)** onto SHOWER ARM **(4)**. Apply sealant or Teflon tape to threads on both ends of SHOWER ARM **(4)** and thread longer leg of SHOWER ARM **(4)** into shower elbow. Thread SHOWER HEAD **(5)** onto SHOWER ARM **(4)**.
- Install SLIP-ON TUB SPOUT **(6)**. Tighten with HEX WRENCH supplied.

Important: Do not overtighten Set Screw.

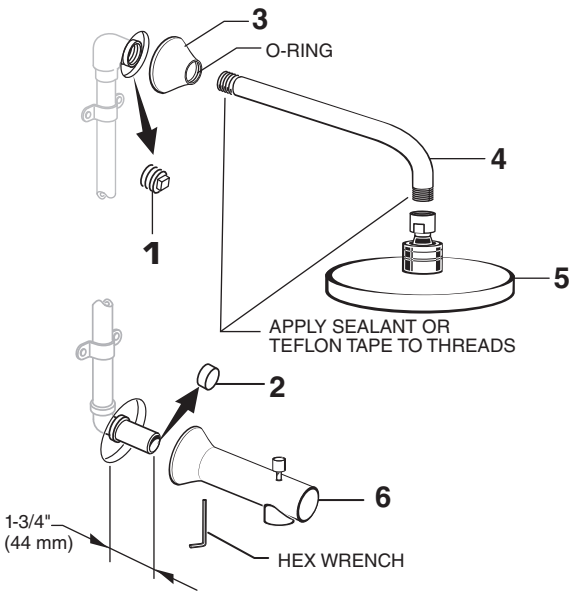

4 INSTALL HANDLE

- Hold ADAPTER **(1)** onto VALVE STEM **(2)** and install ADAPTER SCREW **(3)** through ADAPTER **(1)** into VALVE STEM **(2)**.Tighten ADAPTER SCREW **(3)** to secure ADAPTER **(1)** to VALVE STEM **(2)**.
- Install HANDLE BASE **(4)** onto ADAPTER **(1)**. Insert SET SCREW (5) into HANDLE BASE **(4)**. Align HANDLE BASE **(4)** and tighten with HEX WRENCH **(6)** supplied.

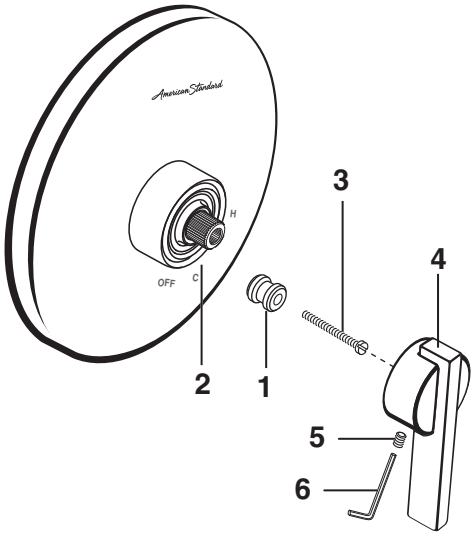

5 ADJUST HOT LIMIT STOP

- By restricting HANDLE rotation and limiting the amount of hot water allowed to mix with the cold, the HOT LIMIT SAFETY STOP **(1)** reduces risk of accidental scalding. To set the maximum hot water temperature of your faucet valve, adjust the setting on the HOT LIMIT SAFETY STOP **(1)**.
- Turn CARTRIDGE STEM **(2)** to the OFF position (coldest setting) before making adjustment to HOT LIMIT STOP **(1)**. Pull forward and rotate counterclockwise one number to limit hot water temperature. Use NUMBERS **(3)** on CARTRIDGE **(4)** on HOT LIMIT STOP **(1)** for indication.

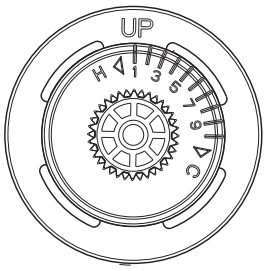

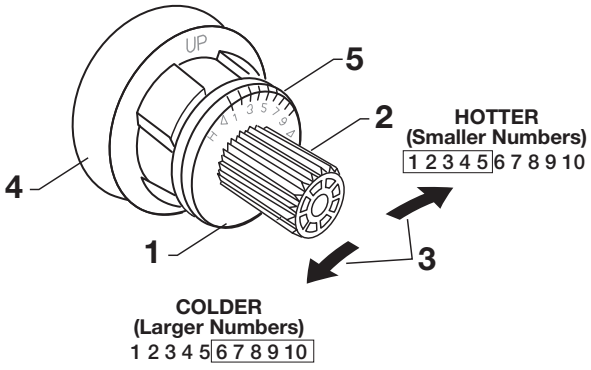

M965941 (8/18)

6 SERVICE

TO GAIN ACCESS TO VALVE FOR SERVICING

CAUTION **Turn off hot and cold water supplies before beginning.**

- Remove HANDLE (see step 3 and reverse).
- Remove ESCUTCHEON and CARTRIDGE CAP (see step 1 and reverse).

VALVE LEAKS WHEN SHUT OFF

- Remove CARTRIDGE, see STEP 1 and STEP 2 and REVERSE process.
- Clean SEALS on the side of CARTRIDGE. Clean inside sealing surface of VALVE BODY.
- Re-assemble CARTRIDGE. Install trim. Turn on water supply and check for leaks.

REPLACING CARTRIDGE (FIGURE 1)

- To remove CARTRIDGE **(1)**, install split WASHER **(3)** between the ridge on the cartridge and the bonnet nut (only supplied with replacement cartridge) as shown.
- Proceed to unthread BONNET NUT **(2)** counter clockwise.
  Note: CARTRIDGE **(1)** should be pulling out while unthreading BONNET NUT **(2)**.
- Upon removal of the old Cartridge, install a new cartridge and secure it with BONNET NUT (Hand tighten).

BACK TO BACK INSTALLATION (FIGURE 2, 3 & 3A)

- Remove CARTRIDGE **(1)**.
- Remove venturi tube by pushing it out. As shown in **FIGURE 3.**
- Rotate CARTRIDGE **(1)** 180˚ so that the Up text is displayed on the bottom side. As shown in **FIGURE 2.**
- Reinstall the venturi tube by pushing it in. As shown in **FIGURE 3A.**
- Insert Cartridge back into the valve.
- Reassemble BONNET NUT **(2)** and hand tighten.

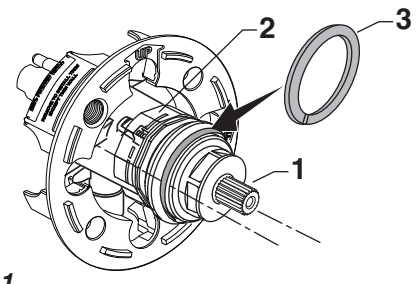

Figure 1.

Standard ***Back to Back***

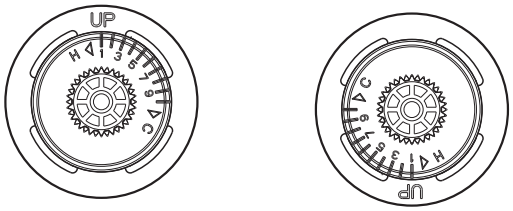

Figure 2.

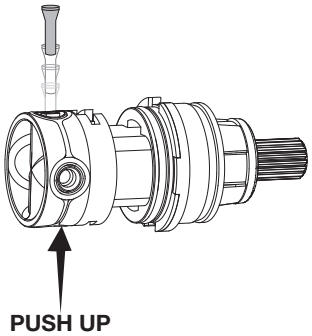

Figure 3.

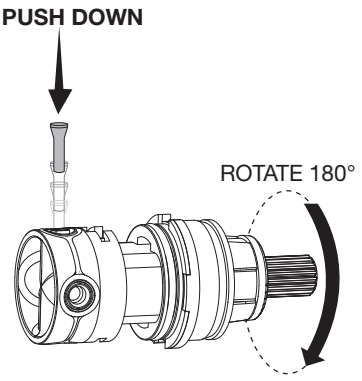

Figure 3A.

7 CARE INSTRUCTIONS:

DO: SIMPLY RINSE THE PRODUCT CLEAN WITH CLEAR WATER. DRY WITH A SOFT COTTON FLANNEL CLOTH.

DO NOT: DO NOT CLEAN THE PRODUCT WITH SOAPS, ACID, POLISH, ABRASIVES, HARSH CLEANERS, OR A CLOTH WITH A COARSE SURFACE.

American Standard

Berwick® / Boulevard®
Pressure Balancing Bath and Shower Trim Kit

MODEL NUMBERS

TU430500 / TU431500
TU430501 / TU431501
TU430502 / TU431502

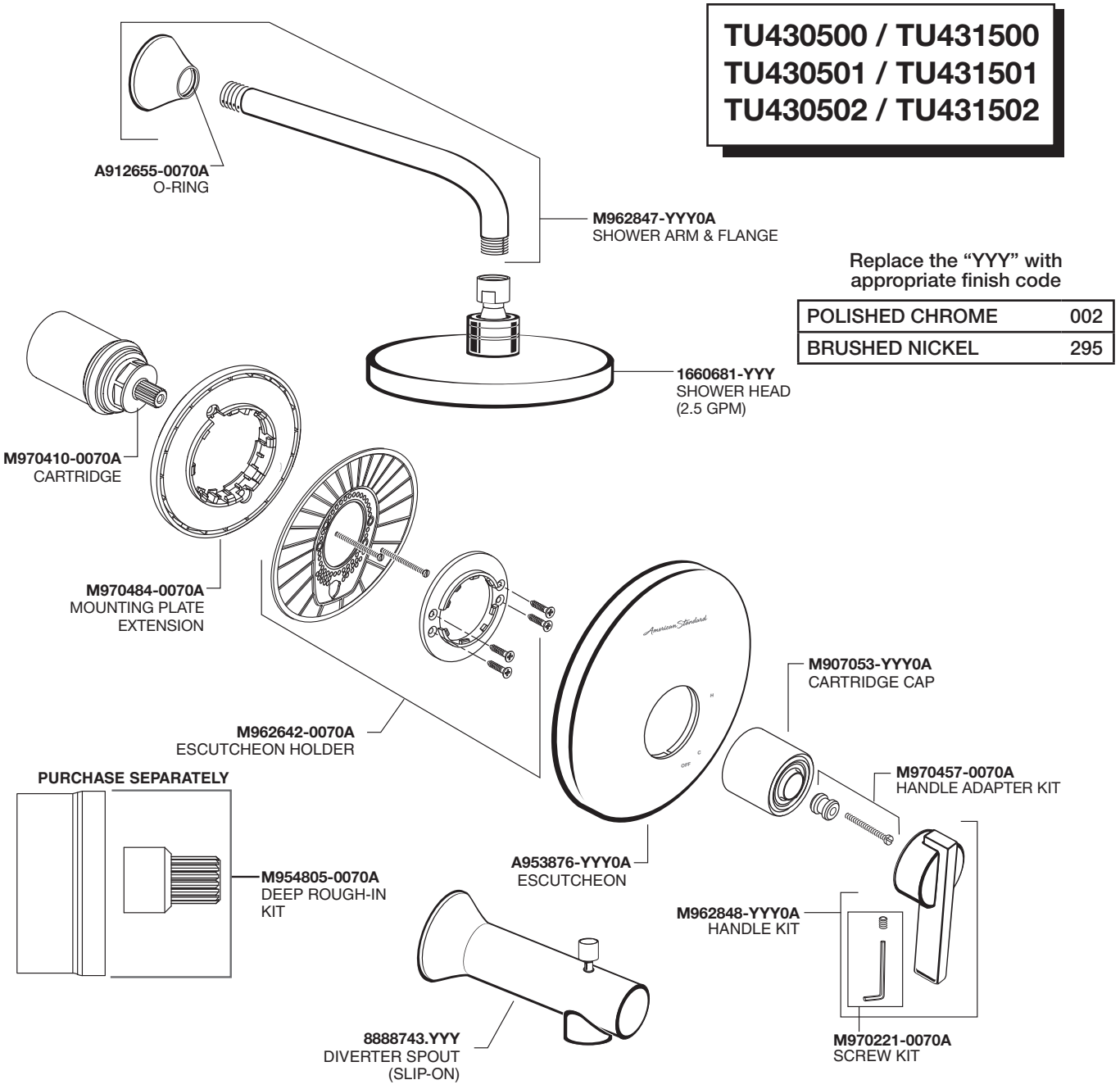

Replace the "YYY" with appropriate finish code

POLISHED CHROME	002
BRUSHED NICKEL	295

HOT LINE FOR HELP

For toll-free information and answers to your questions, call:
1 (800) 442-1902
Mon. - Fri. 8:00 a.m. to 8:00 p.m. EST
Saturday 10:00 a.m. to 4:00 p.m. EST

IN CANADA 1-800-387-0369
(TORONTO 1-905-306-1093)
Weekdays 8:00 a.m. to 7:00 p.m. EST

IN MEXICO 01-800-839-1200



PART OF LIXIL

M965941 (8/18)