INSTALLATION AND OPERATION MANUAL

EST. 1904
ELJER
BY AMERICAN STANDARD

WHIRLPOOL, AIR BATHS AND SOAKING TUBS

MODEL NUMBERS:

015-0005
015-0015
015-0026
015-0066
015-0076
015-0077
015-0140
015-0141
015-0142R
015-0142L
015-0143
015-0144
015-0145
015-0146
015-0150
015-0156
015-0305
015-0309
015-2500
015-4800
015-5400

025-0005
025-0140
025-0141
025-0142R
025-0142L
025-0143
025-0144
025-0145
025-0146
025-0155
025-0159
025-2505
025-4805
025-5405

035-0140
035-0141
035-0142R
035-0142L
035-0143
035-0144
035-0145
035-0146
035-0151
035-0158
035-2501
035-5401

045-0140
045-0141
045-0142R
045-0142L
045-0143
045-0145
045-0146
045-0154
045-0157
045-2504
045-4804
045-5404

THANK YOU...

for selecting an Eljer bathing product. Your new bath is shipped to you after careful inspection. The whirlpool version is completely assembled with pump and circulatory system piping. All you need to finish the installation are your selected fittings, electrical connections and support bedding material.

To ensure maximum performance and pleasure from this product, please follow the instructions and cautions.

For questions or service issues, please call Technical Support 1-(800)-442-1902.
Please do not contact or return product to the store.

© Eljer 2015
All product names listed herein are trademarks of Eljer unless otherwise noted.

TABLE OF CONTENTS:

Cover.....Page 1

Table of Contents.....Page 2

Safety Instructions Notice.....Page 3

Installation, Framing and Post Installation
Clean-Up Instructions.....Page 4 - 5

Typical Flange & Under Deck Mounting Instructions.....Page 5 - 6

General Specifications for Whirlpools.....Page 7 - 8

Roughing-in References for All Model Series.....Pages 9 - 17

Electrical Installation Instructions.....Page 18 - 19

Whirlpool and Air Massage
Combination Models.....Page 19

Operating Instructions.....Page 20

Cleaning and Maintenance.....Page 21

Warranty.....Page 22

IMPORTANT SAFETY INSTRUCTIONS

INSTRUCTIONS PERTAINING TO A RISK OF FIRE, ELECTRIC SHOCK OR INJURY TO PERSONS

READ AND FOLLOW ALL INSTRUCTIONS!

⚠ **WARNING:** ***Risk of personal injury.*** Do not permit children to use this unit without adult supervision.

⚠ **WARNING:** ***Risk of personal injury.*** Do not operate this unit without the guard over the suction fitting.

⚠ **WARNING:** ***Risk of electric shock.*** Do not permit electrical appliances (hair dryer, telephone, radio, etc.) within 60 inches (1524mm) of this unit.

⚠ **WARNING:** ***Risk of hyperthermia and possible drowning.*** People using medications and/or having adverse medical history should consult a physician before using this product.

⚠ **WARNING:** ***Risk of personal injury.*** Do not overfill unit before entering. Entering tub when filled more than 2/3 can cause overflow and slippery conditions. Exercise caution when entering and exiting.

⚠ **WARNING:** ***No Food or Alcoholic Beverages.*** Use of your bathtub immediately after meals is not recommended. Avoid alcohol consumption before or during bathing. Alcoholic beverages can cause drowsiness or hyperthermia resulting in loss of consciousness or even drowning.

⚠ **WARNING:** ***Pregnancy.*** If you are or think you may be pregnant, consult your physician before using the bathtub.

Never drop or insert any object into any opening.

Use this unit only for its intended use as described in this manual. Do not use any attachments not recommended by American Standard.

The unit must be connected only to a supply circuit that is properly protected by a ground-fault circuit-interrupter (GFCI). Such a GFCI should be provided by the installer and should be tested on a routine basis. To test the GFCI, push the test button. The GFCI should interrupt power. Push the reset button. Power should be restored. If the GFCI fails to operate in this manner, the GFCI is defective. If the GFCI interrupts power to the bathtub without the test button being pushed, a ground current is flowing, indicating the possibility of an electric shock. Do not use this hydromassage bathtub. Disconnect the hydromassage bathtub and have the problem corrected by a licensed electrician before using.

A pressure wire connector is provided on the exterior of the motor unit to permit connection of a no. 8 AWG solid copper bonding conductor between this unit and all other electrical equipment and exposed metal in the vicinity, as needed to comply with local requirements. To reduce the risk of an electric shock, connect this connector to the grounding terminal of your electric service or supply panel with a conductor equivalent in size to the circuit conductors supplying this unit.

SAVE THESE INSTRUCTIONS

Installation and Framing Instructions

Each bath arrives ready for installation, completely equipped with the pump and plumbing necessary for operation. However, a drain/overflow kit is required for each bath and it is not included.

The variety of installations for this bath may require framing procedures other than those shown. Locate studs as required. Ensure roughing-in dimensions are proper, plumb, and square.

⚠ Remove the bath from the carton. Retain the shipping carton until satisfactory inspection of the product has been made. Do not lift the bath by the plumbing at any time; handle by the shell only.

⚠ All bath units are factory tested for proper operation and watertight connections prior to shipping. Prior to installation and before enclosing with wallboard, tile, etc., the bath must be filled with water and operated to check for leaks that may have resulted from shipping damage or mishandling.

⚠ The sumps of these baths are not supported by the feet and additional sump support is required. Once the bath is in place, the rim of the bath should contact the stringer or pier but supports no weight.

⚠ Provisions must be made in all installations for an access opening for servicing the bath pump. Unless an access opening of at least 12" x 24" (305mm x 610mm) is provided, warranty service will not be performed. It is strongly recommended that an additional opening be provided for access to drain components.

⚠ Each bath has a nominal length (L), width (W), and Height (H) along with a rim height. Unless otherwise noted in the following rough-in references, assume that the nominal tolerances are as much as +/-1/4 inch (6mm). Therefore, it is strongly recommended that the installer build the surrounding structure after receiving the actual bath. Structural measurements should be verified against the actual bath received to ensure proper fit.

POST INSTALLATION CLEAN-UP

Remove all construction debris from bath. Tile grout can be removed with a wooden popsicle stick or tongue depressor.

Do not use wire brushes or any other metal implement on bath surface.

Post installation clean-up generally can be completed using warm water and liquid dishwashing detergent.

Stubborn dirt or stains may be removed using granular Spic and Span® mixed with water.

Painter's naphtha can be used to remove excess adhesives and/or wet oil-base paint.

INSTALLATION AND FRAMING INSTRUCTIONS

The variety of installations possible for this whirlpool may require framing procedures other than those shown. Locate studs as needed. Ensure roughing-in dimensions are proper, plumb and square. Provisions must be made in all installations for an access opening for servicing the pump and controls. It is strongly recommended that an additional opening be provided for access to the drain components. The apron should not be used as the primary access opening.

1. Position the whirlpool into the installation opening and level the deck in both directions, shimming the integral leveling feet IF necessary. Mark the final position of the underside of the deck by tracing a line on to the studs (see Figure 1).

2. Remove the whirlpool and attach a 1 x 4 stringer to the studs, with the top of the stringer touching the traced line.

⚠ The rim of the bath **must not** support weight.

3. Install drain components to the whirlpool following the drain installation instructions. Before replacing your whirlpool for final installation, be certain that an opening has been provided in the sub-floor for the drain. See the roughing-in drawing and Table 1 for suggested opening size (shadowed) and location dimensions. The drain/overflow of the bath extends below the bottom of the bath. Note that this requires a cutout in the floor.

⚠ The floor structure beneath the bath must be able to support a total weight of bath, water, and bather. Refer to Table 1 under total weight for your model.

The bath must be supported along it's entire bottom. Use mortar as bedding material (do not use sand or foam). Apply enough mortar to support the complete bottom of the bath. After the mortar has been poured, and before it sets, position whirlpool or bath until the rim is leveled against the leveling stringers or mounting surfaces (see "Typical Installations") shown below.

⚠ The rim of the bath **must not** support weight. If foundation base is used, allow the bedding material to completely harden before applying weight to the rim or bottom of the bath. Any finish material such as tile or wall board must be self-supporting if it contacts the deck of the bath.

FIGURE 1

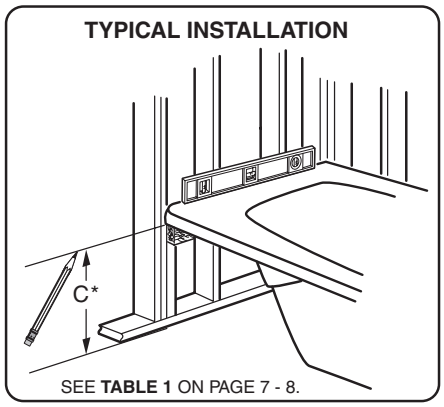

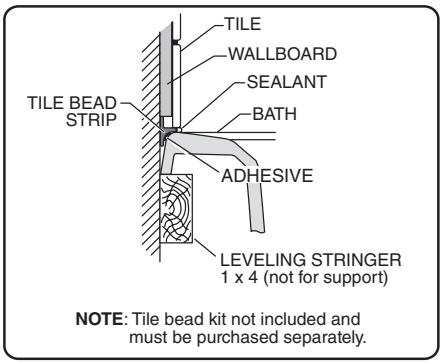

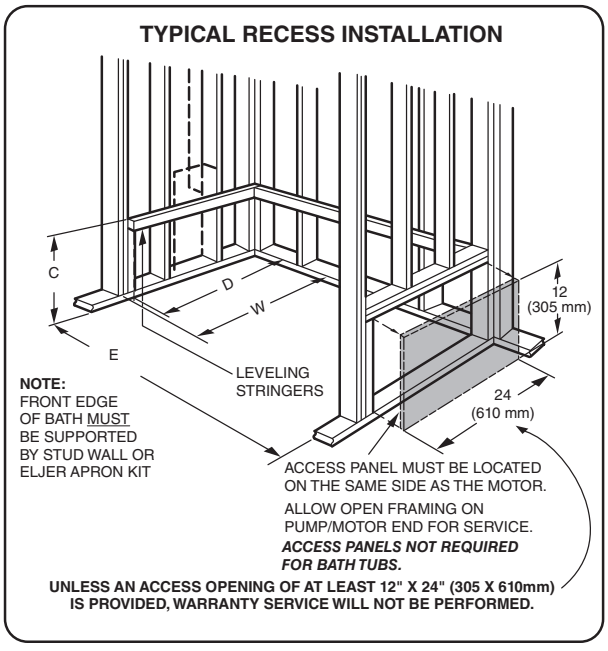

FOR E & D DIMENSIONS SEE **TABLE 1** ON PAGE 7 - 8.

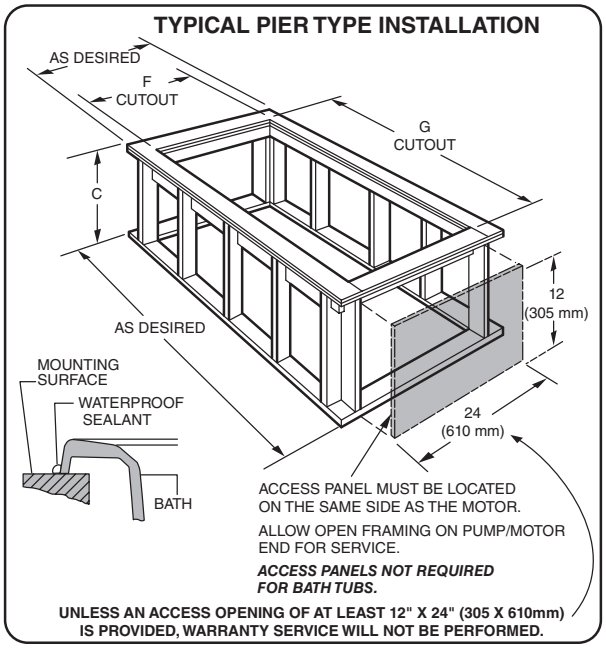

FOR C, G & F DIMENSIONS SEE **TABLE 1** ON PAGE 7 - 8.

TYPICAL FLANGE MOUNTING DETAIL

SUGGESTED WHIRLPOOL / BATH INSTALLATION METHOD

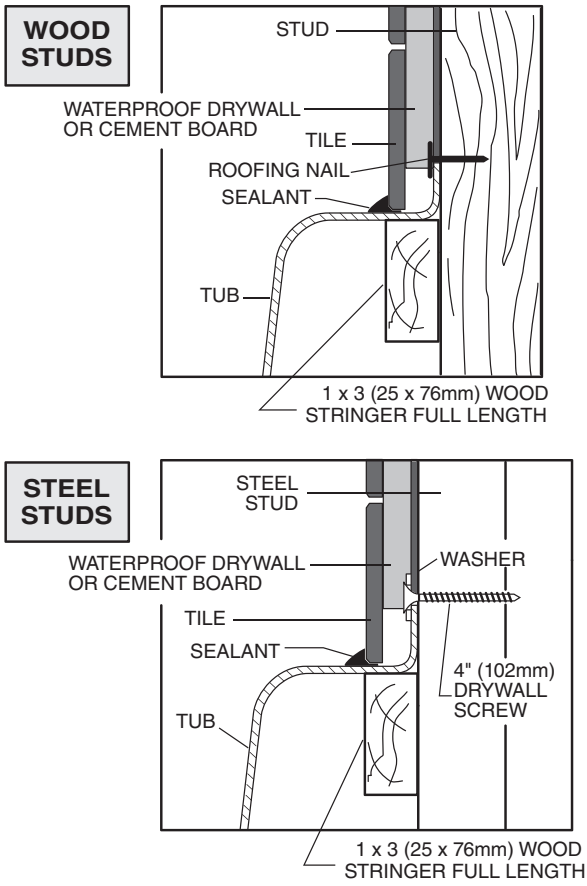

SECURE THE BATH TO THE STUDS AS SHOWN FOR WOOD OR STEEL STUD CONSTRUCTION.

TYPICAL INSTALLATION - CORNER

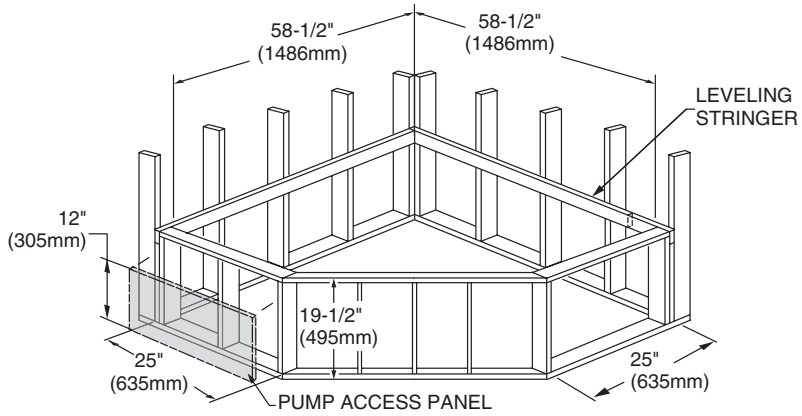

UNLESS AN ACCESS OPENING OF AT LEAST 12" X 24" (305 X 610mm) IS PROVIDED, WARRANTY SERVICE WILL NOT BE PERFORMED.

SPECIFICATIONS:

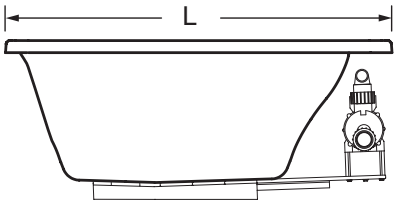

SIDE VIEW

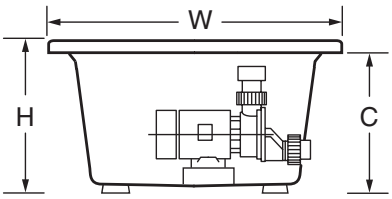

END VIEW

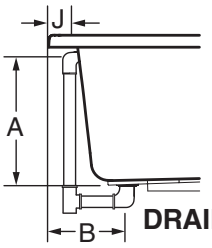

DRAIN / OVERFLOW

GENERAL SPECIFICATIONS FOR ELJER WHIRLPOOLS AND BATH TUBS

Description	Dimensions L-W-H	Drain / Overflow	Height to Underside of Deck: C	Cut Out Pier G x F	Rough-In Recess E x D	Tub Edge to Centerline Overflow: J	Weight with Water / Floor Loading	Product Weight	Gallon to Overflow
015-0005 5' x 32" Cypress	L 60" (1524mm) W 32" (813mm) H 18-1/2" (469mm)	A 16" (406mm) B 10-1/4" (260mm)	C 17-1/2" (445mm)	58-1/2" (1486mm) x 30-1/2" (775mm)	60" (1524mm) x 30-1/2" (775mm)	2-1/4" (57mm)	418 lb. (190 kg)/ 31 lb./sq.ft. (153 kg/sq.m)	98 lb. (45 kg.)	40
015-0015 5' x 32" Madison	L 60" (1524mm) W 32" (813mm) H 19" (483mm)	A 16" (406mm) B 10-1/4" (260mm)	C 17-1/2" (445mm)	58-1/2" (1486mm) x 30-1/2" (775mm)	60" (1524mm) x 30-1/2" (775mm)	2" (51mm)	418 lb. (190 kg)/ 31 lb./sq.ft. (153 kg/sq.m)	98 lb. (45 kg.)	40
015-0026 5' x 36" Canterbury	L 60" (1524mm) W 36" (914mm) H 19-3/8" (492mm)	A 16-1/4" (413mm) B 8-1/4" (209mm)	C 17-7/8" (454mm)	58-1/2" (1486mm) x 34-1/2" (876mm)	60" (1524mm) x 34-1/2" (876mm)	2" (51mm)	414 lb. (188 kg)/ 28 lb./sq.ft. (135 kg/sq.m)	102 lb. (46 kg.)	45
015-0066 Triangle	L 60" (1524mm) W 60" (1524mm) H 21" (533mm)	A 17" (432mm) B 10-1/2" (267mm)	C 19-1/2" (495mm)	58-1/2" (1486mm) x 58-1/2" (1486mm)	Not Applicable	3-1/4" (83mm)	695 lb. (316 kg)/ 34 lb./sq.ft. (166 kg/sq.m)	119 lb. (54 kg.)	72
015-0076 6' x 36" Emblem	L 72" (1829mm) W 36" (914mm) H 19-1/2" (495mm)	A 16" (406mm) B 10-1/2" (267mm)	C 18" (457mm)	70-1/2" (1791mm) x 34-1/2" (876mm)	72" (1829mm) x 34-1/2" (876mm)	1-1/2" (38mm)	543 lb. (247 kg)/ 30 lb./sq.ft. (148 kg/sq.m)	103 lb. (47 kg.)	55
015-0077 6' x 36" Emblem Total Massage	L 72" (1829mm) W 36" (914mm) H 19-1/2" (495mm)	A 16" (406mm) B 10-1/2" (267mm)	C 18" (457mm)	70-1/2" (1791mm) x 34-1/2" (876mm)	72" (1829mm) x 34-1/2" (876mm)	1-1/2" (38mm)	559 lb. (254 kg)/ 31 lb./sq.ft. (152 kg/sq.m)	119 lb. (54 kg.)	55
015-0305/0309 5' x 32" Patriot	L 60" (1524mm) W 32" (813mm) H 18-3/4" (476mm)	A 14" (356mm) B 9-1/2" (241mm)	C 18-1/2" (469mm)	Not Applicable	60" (1524mm) x 30-1/2" (775mm)	2-1/4" (57mm)	455 lb. (207 kg)/ 34 lb./sq.ft. (167 kg/sq.m)	135 lb. (61 kg.)	40

TABLE 1

(continued on next page)

SPECIFICATIONS:

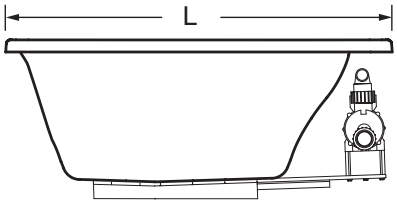

SIDE VIEW

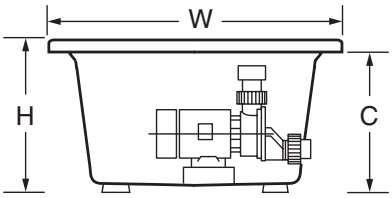

END VIEW

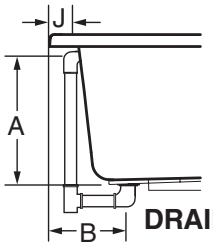

DRAIN / OVERFLOW

GENERAL SPECIFICATIONS FOR ELJER WHIRLPOOLS AND BATH TUBS

Description	Dimensions L-W-H	Drain / Overflow	Height to Underside of Deck: C	Cut Out Pier G x F	Rough-In Recess E x D	Tub Edge to Centerline Overflow: J	Weight with Water / Floor Loading	Product Weight	Gallon to Overflow
025-0005 5' x 32" Cascada	L 60" (1524mm) W 32" (813mm) H 19-1/2" (495mm)	A 15" (381mm) B 10-1/4" (260mm)	C 18" (457mm)	58-1/2" (1486mm) x 30-1/2" (775mm)	60-1/8" (1527mm) x 30-1/2" (775mm)	2" (51mm)	425 lb. (193 kg)/ 32 lb./sq.ft. (156 kg/sq.m)	92 lb. (42 kg.)	40
025-0140 5' x 32" LaSalle	L 60" (1524mm) W 32" (813mm) H 20" (508mm)	A 16" (406mm) B 9-1/2" (241mm)	C 18-1/2" (469mm)	58-1/2" (1486mm) x 30-1/2" (775mm)	60-1/8" (1527mm) x 30-1/2" (775mm)	1-3/4" (44mm)	548 lb. (249 kg)/ 41 lb./sq.ft. (201 kg/sq.m)	90 lb. (41 kg.)	55
025-0141 5' x 36" LaSalle XL	L 72" (1829mm) W 36" (914mm) H 21" (533mm)	A 17" (432mm) B 9-1/2" (241mm)	C 19-1/2" (495mm)	70-1/2" (1791mm) x 34-1/2" (876mm)	72-1/8" (1832mm) x 34-1/2" (876mm)	1-3/4" (44mm)	862 lb. (392 kg)/ 48 lb./sq.ft. (234 kg/sq.m)	112 lb. (51 kg.)	90
025-0142R 025-0142L 5' x 32" Cabrillo	L 60" (1524mm) W 32" (813mm) H 20-1/2" (520mm)	A 16" (406mm) B 9-1/2" (241mm)	C 20" (508mm)	Not Applicable	60-1/8" (1527mm) x 30-1/2" (775mm)	1-3/4" (44mm)	699 lb. (318 kg)/ 52 lb./sq.ft. (256 kg/sq.m)	124 lb. (56 kg.)	69
025-0143 60" x 60" Gemini	L 60" (1524mm) W 60" (1524mm) H 21-1/2" (546mm)	A 17" (432mm) B 10-1/2" (267mm)	C 20" (508mm)	58-1/2" (1486mm) x 58-1/2" (1486mm)	Not Applicable	6-1/4" (159mm)	863 lb. (392 kg)/ 41 lb./sq.ft. (201 kg/sq.m)	130 lb. (59 kg.)	88
025-0144 59-3/4" x 32" Merrick	L 59-3/4" (1518mm) W 32" (813mm) H 19-1/4" (489mm)	A 15" (381mm) B 7-3/4" (197mm)	C 17-3/4" (451mm)	58-1/2" (1486mm) x 30-1/2" (775mm)	60-1/8" (1527mm) x 30-1/2" (775mm)	1-3/4" (44mm)	656 lb. (298 kg)/ 49 lb./sq.ft. (240 kg/sq.m)	90 lb. (41 kg.)	68
025-0145 6' x 36" Merrick XL	L 72" (1829mm) W 36" (914mm) H 23-3/4" (603mm)	A 19-1/2" (495mm) B 8-1/4" (210mm)	C 22-1/4" (565mm)	70-1/2" (1791mm) x 34-1/2" (876mm)	72-1/8" (1832mm) x 34-1/2" (876mm)	1-3/4" (44mm)	1124 lb. (511 kg)/ 62 lb./sq.ft. (306 kg/sq.m)	124 lb. (58 kg.)	120
025-0146 58" x 38" Ridgefield	L 58" (1473mm) W 38" (965mm) H 23-1/2" (597mm)	A 19-1/2" (495mm) B 7-3/8" (187mm)	C 21-1/2" (546mm)	56" (1422mm) x 36" (914mm)	Not Applicable	2-3/4" (70mm)	763 lb. (347 kg)/ 62 lb./sq.ft. (306 kg/sq.m)	97 lb. (44 kg.)	80

TABLE 1

(continued from previous page)

ROUGH-IN REFERENCES

CYPRESS MODEL 015-0005

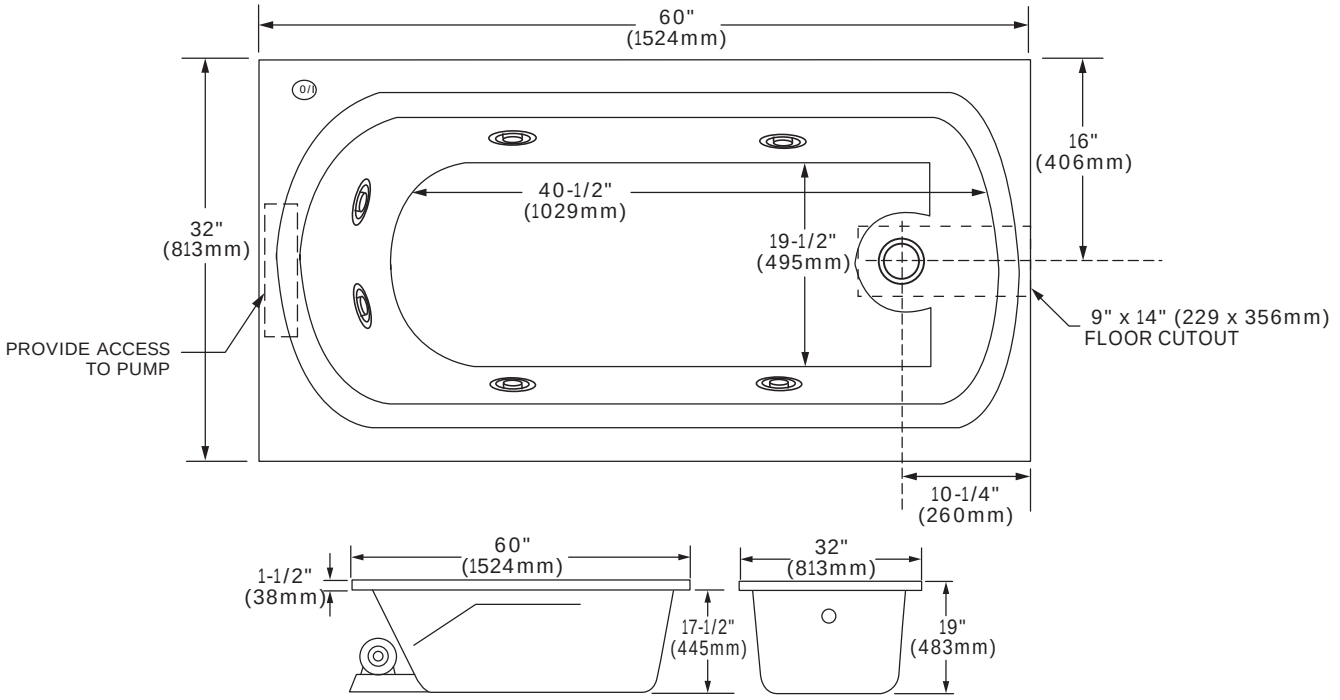

MADISON MODEL 015-0015

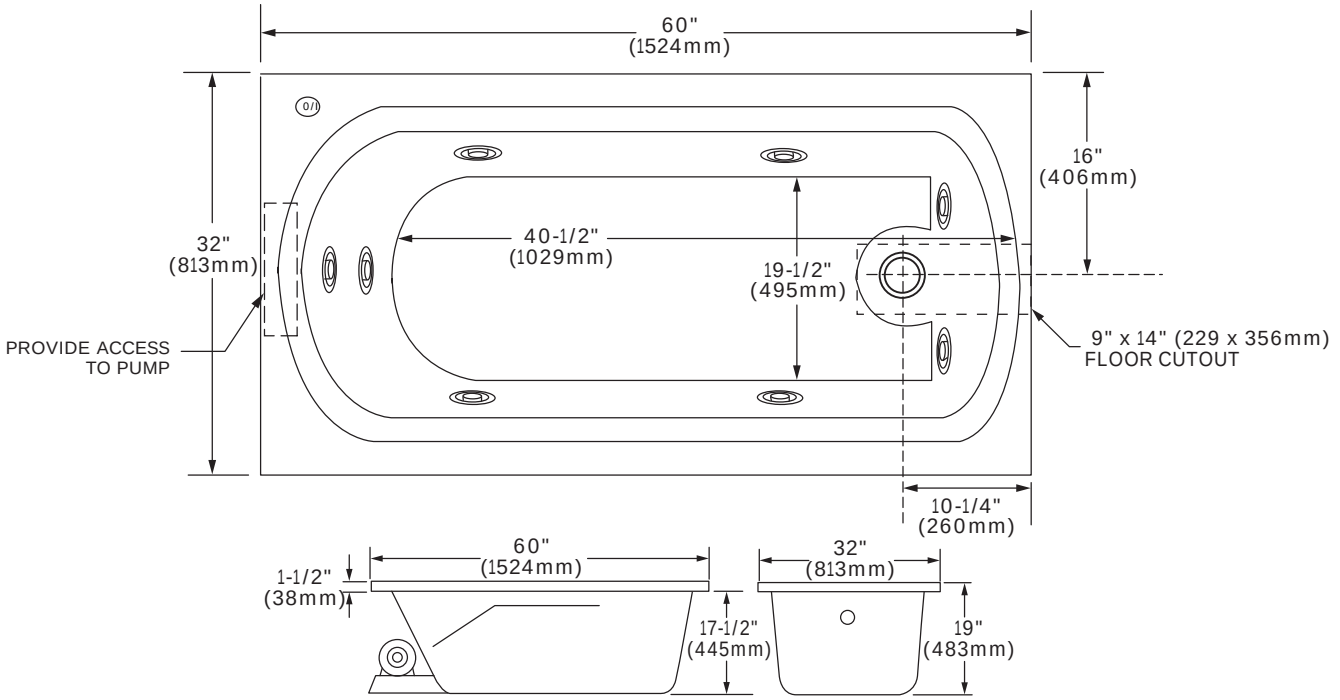

ROUGH-IN REFERENCES

CANTERBURY MODEL 015-0026

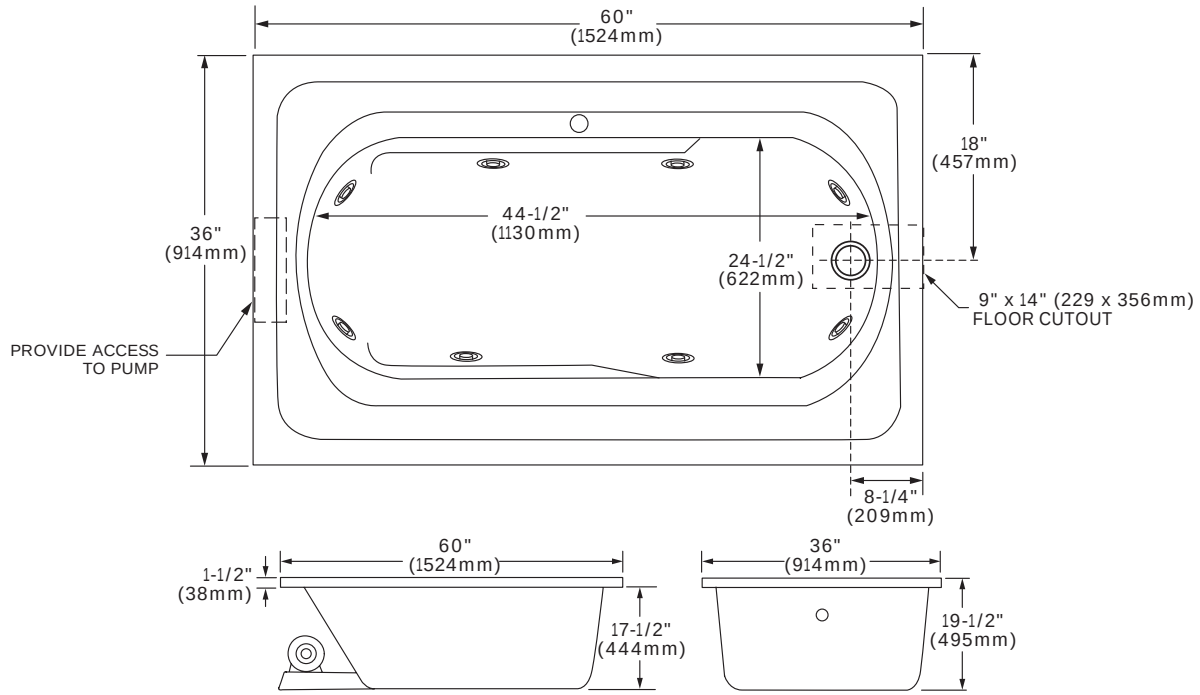

TRIANGLE MODEL 015-0066

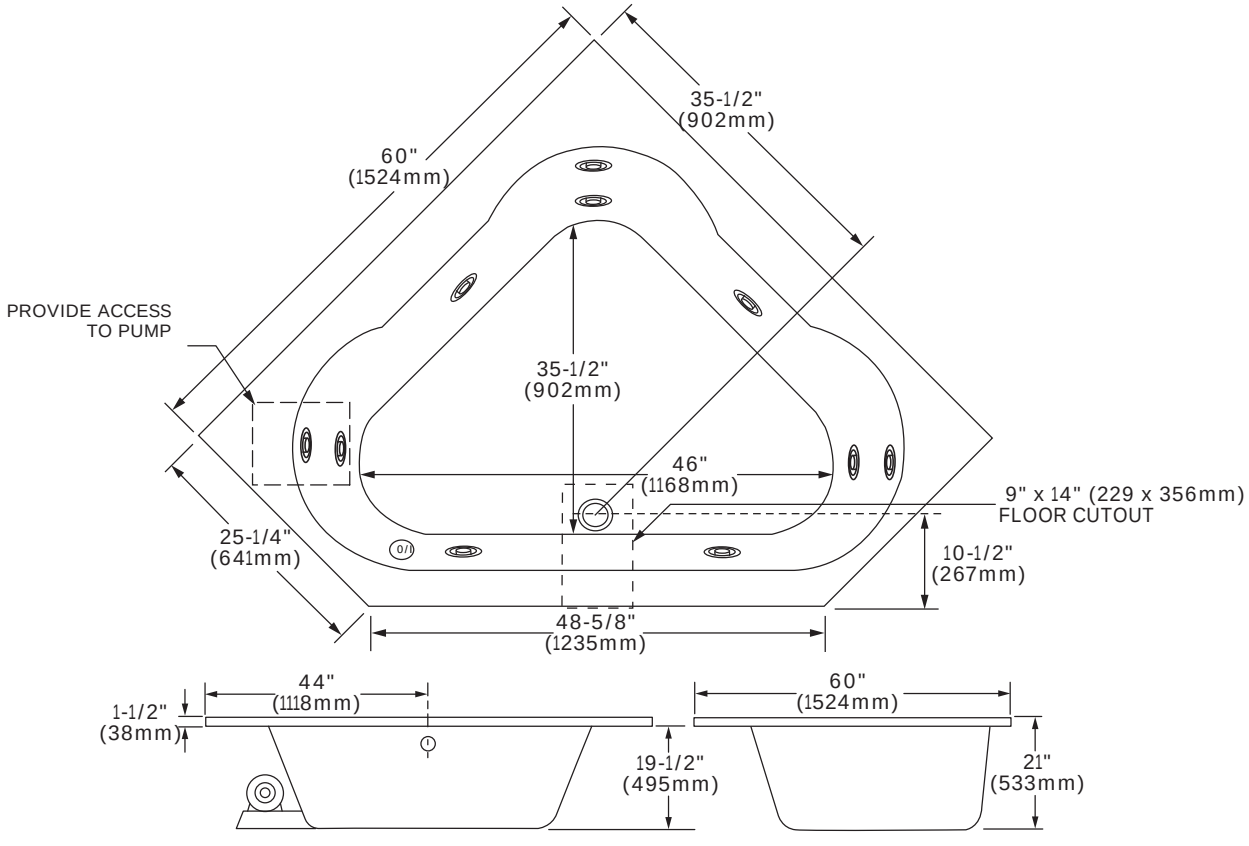

ROUGH-IN REFERENCES

EMBLEM MODEL 015-0076
EMBLEM TOTAL MASSAGE MODEL 015-0077

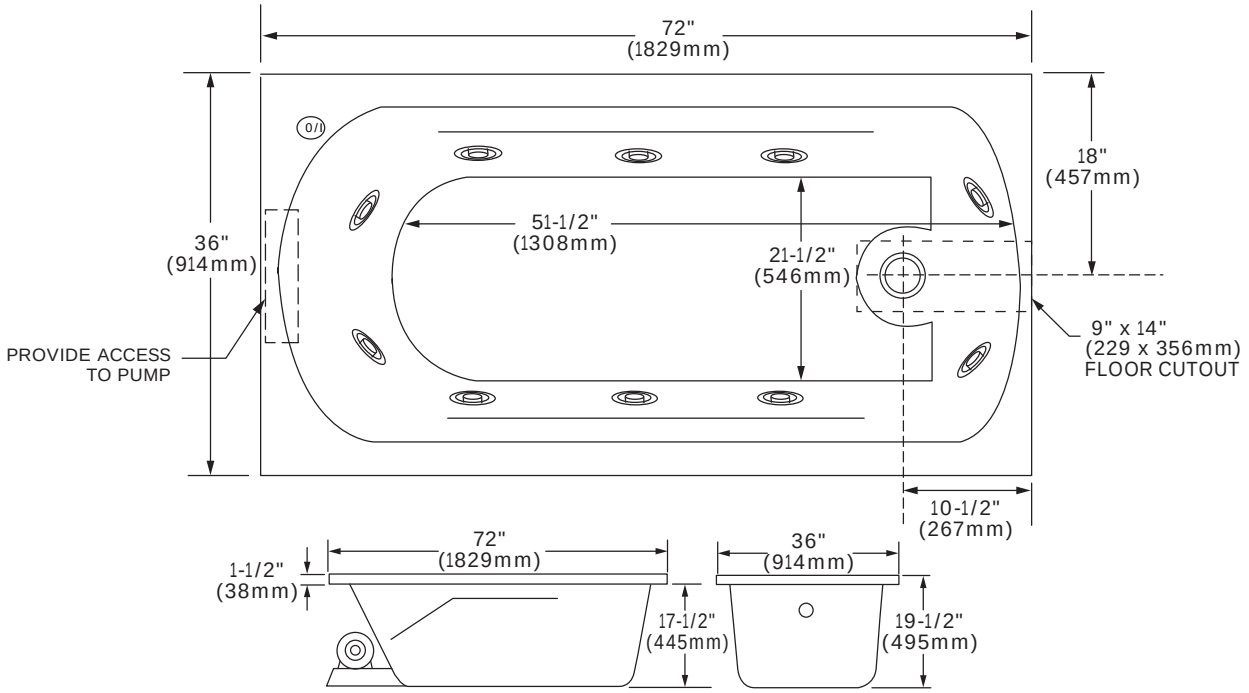

PATRIOT MODEL 015-0309 / 0305
(Right hand version shown)

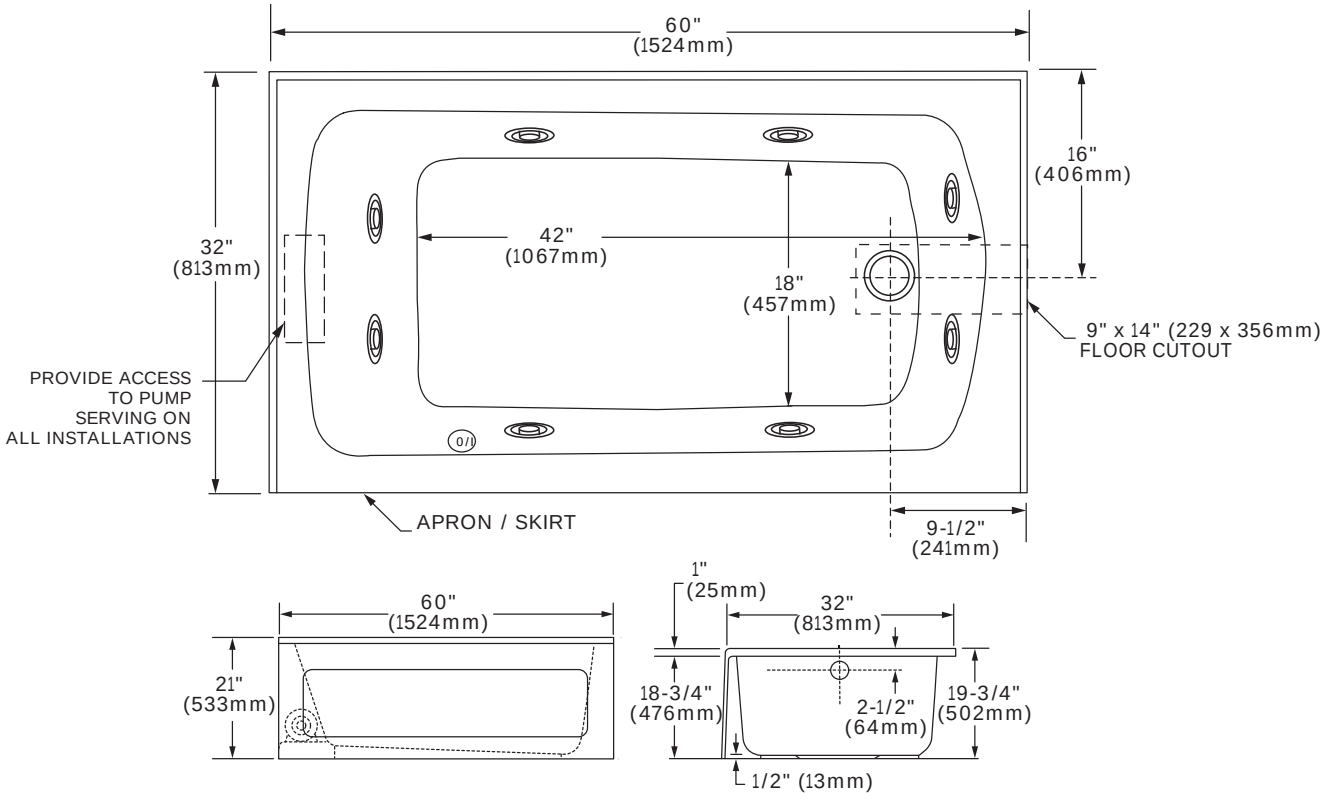

ROUGH-IN REFERENCES

CABRILLO MODEL 025-0142R/L

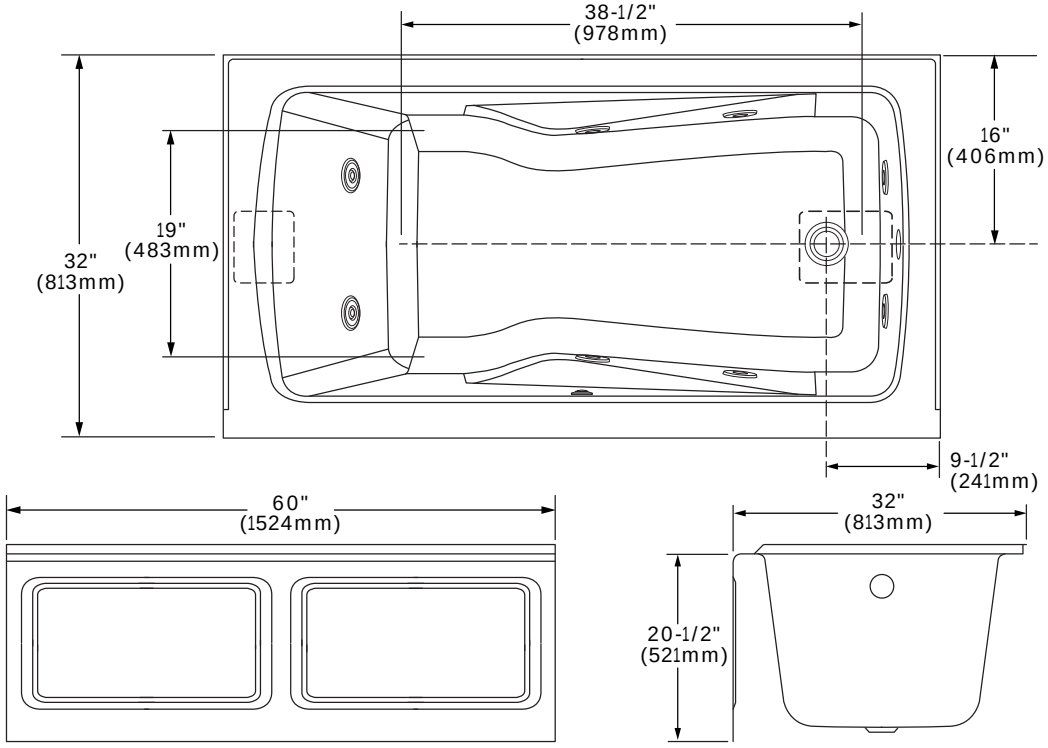

CASCADA MODEL 025-0005

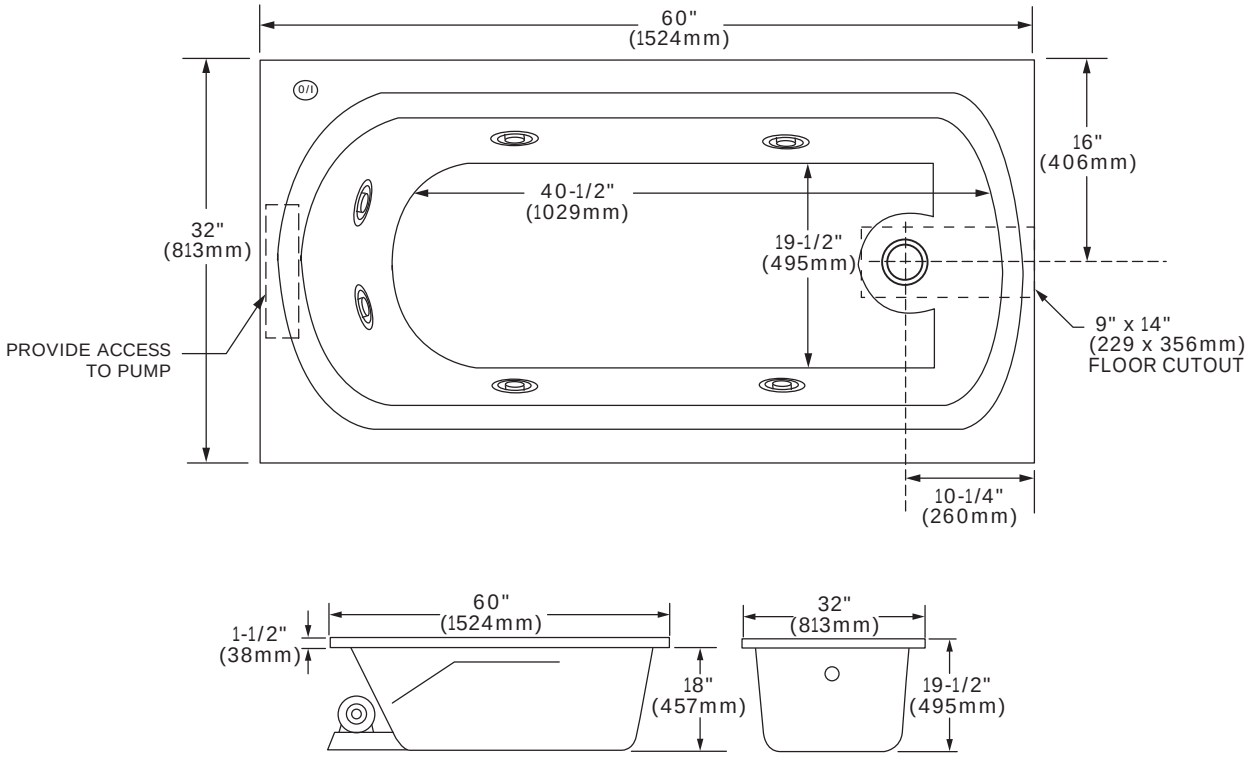

ROUGH-IN REFERENCES

LASALLE MODEL 025-0140

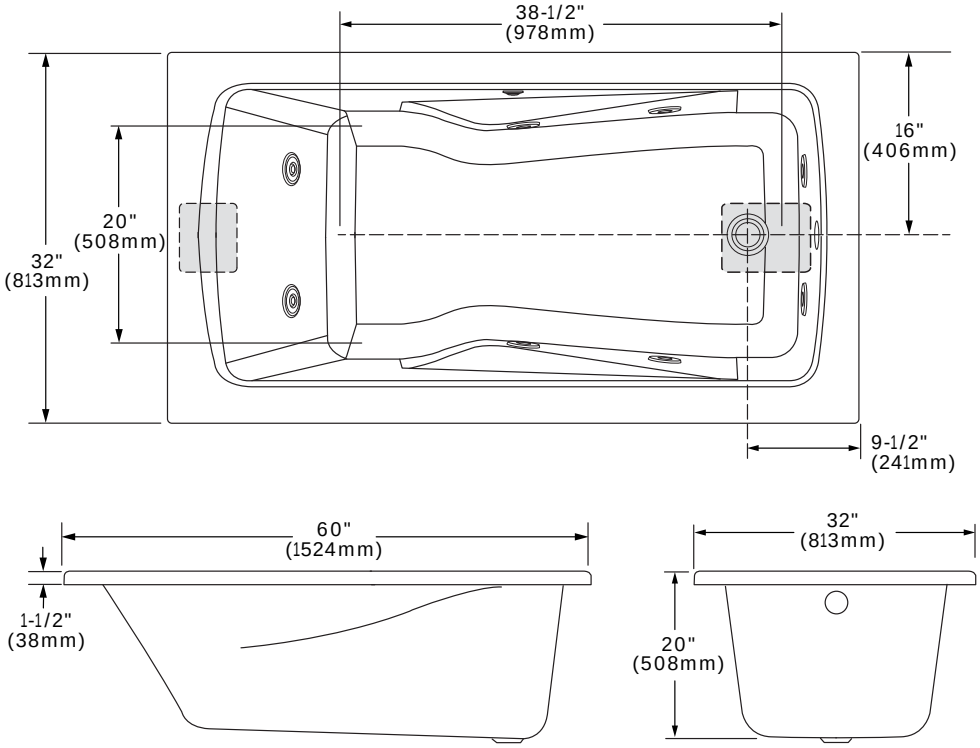

LASALLE XL MODEL 025-0141

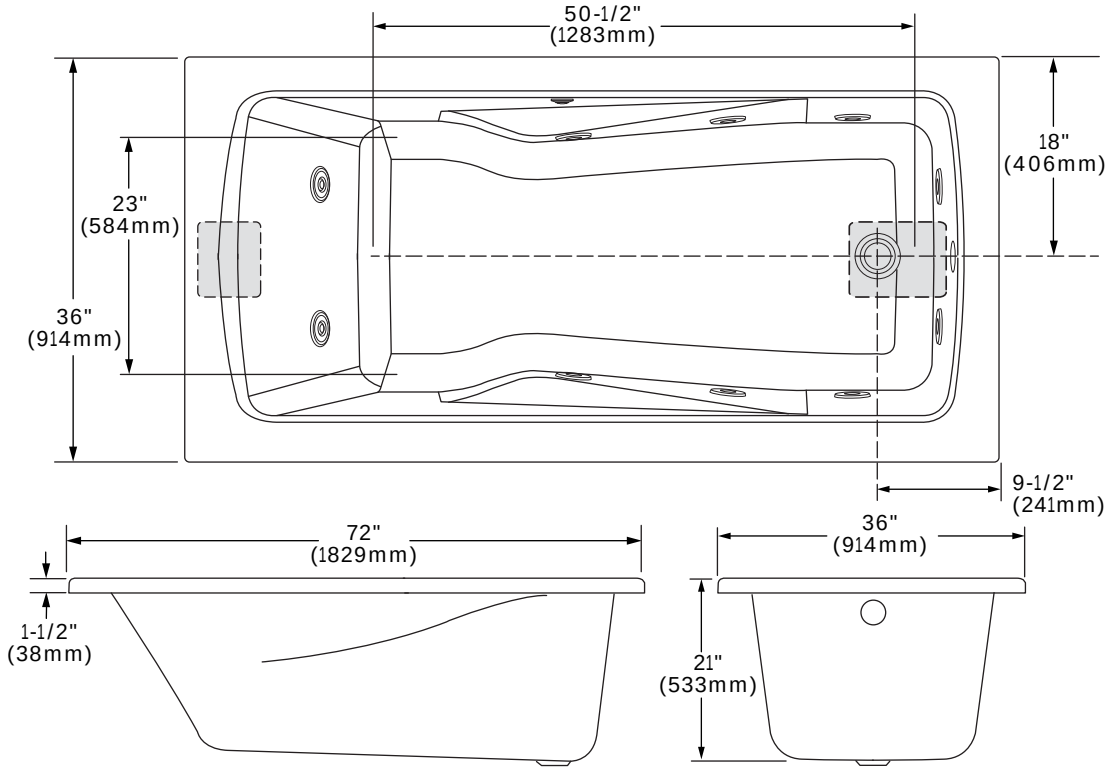

ROUGH-IN REFERENCES

MERRICK MODEL 025-0144

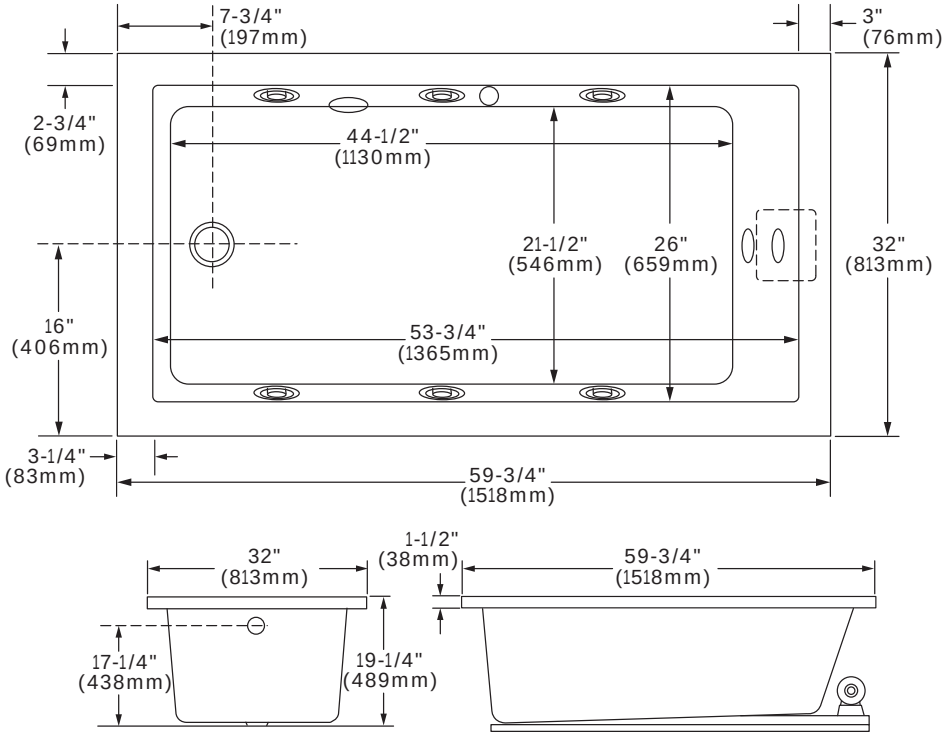

MERRICK XL MODEL 025-0145

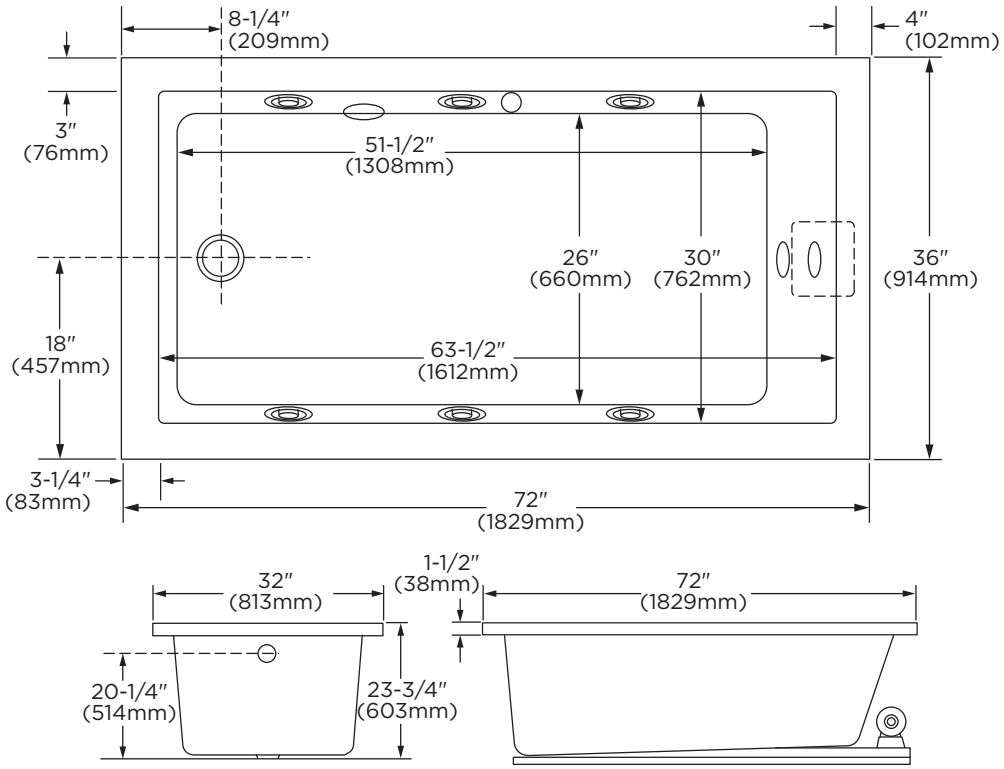

ROUGH-IN REFERENCES

GEMINI MODEL 025-0143

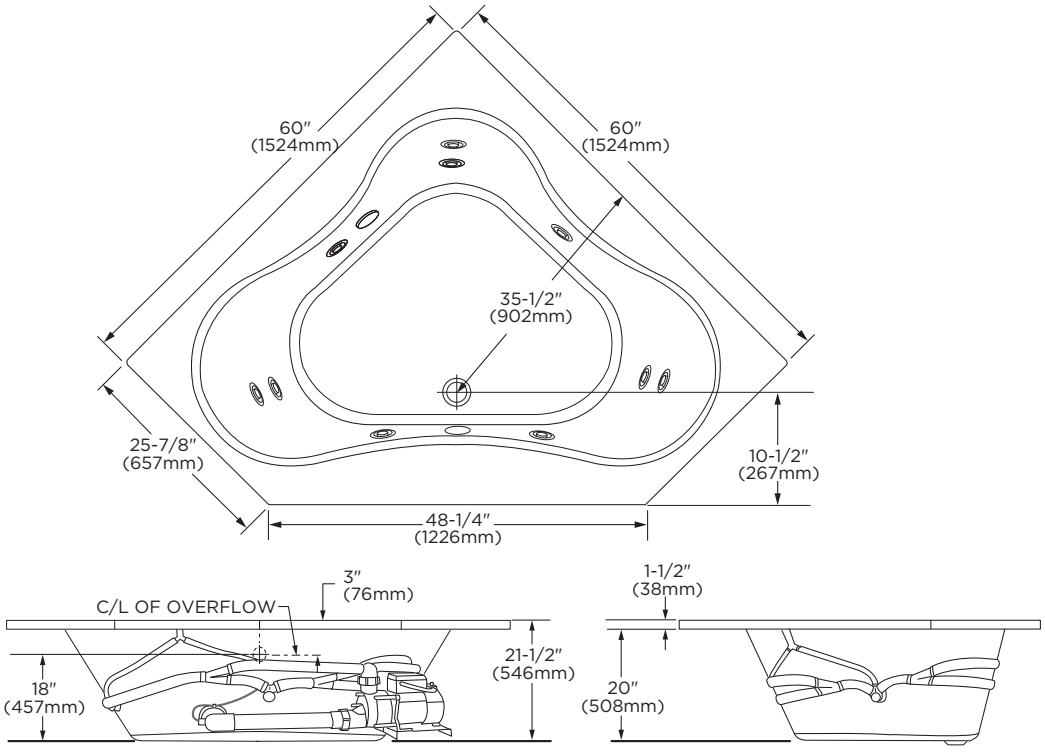

RIDGEFIELD MODEL 025-0146

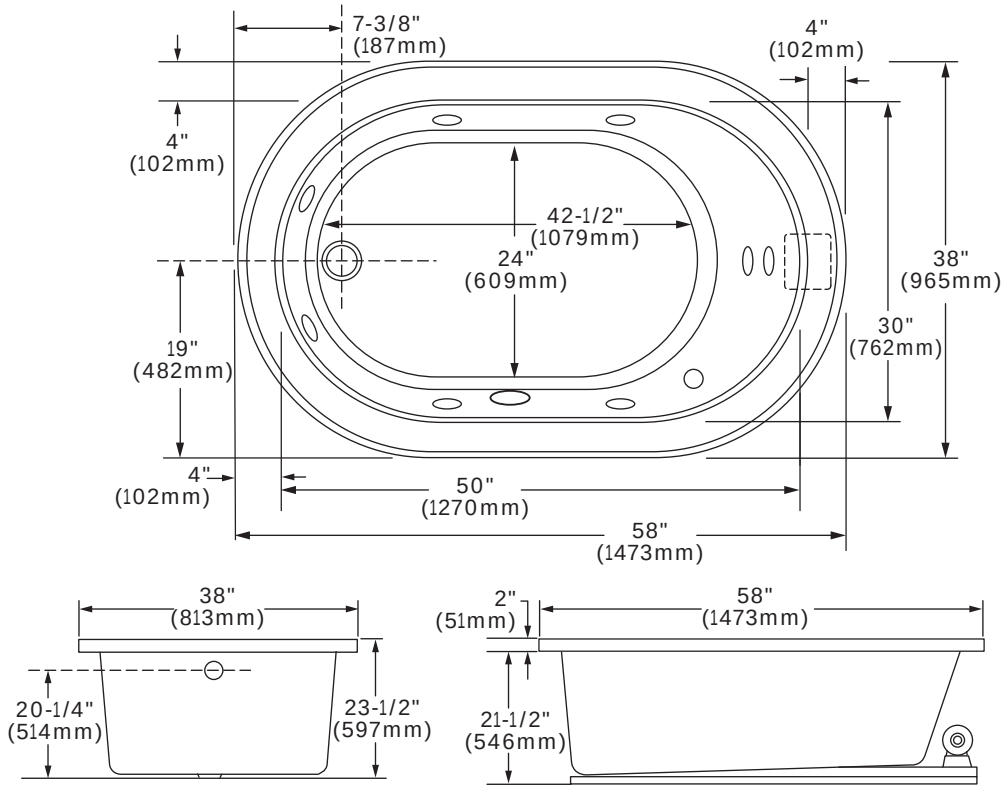

ROUGH-IN REFERENCES

VENICE MODEL 025-2505

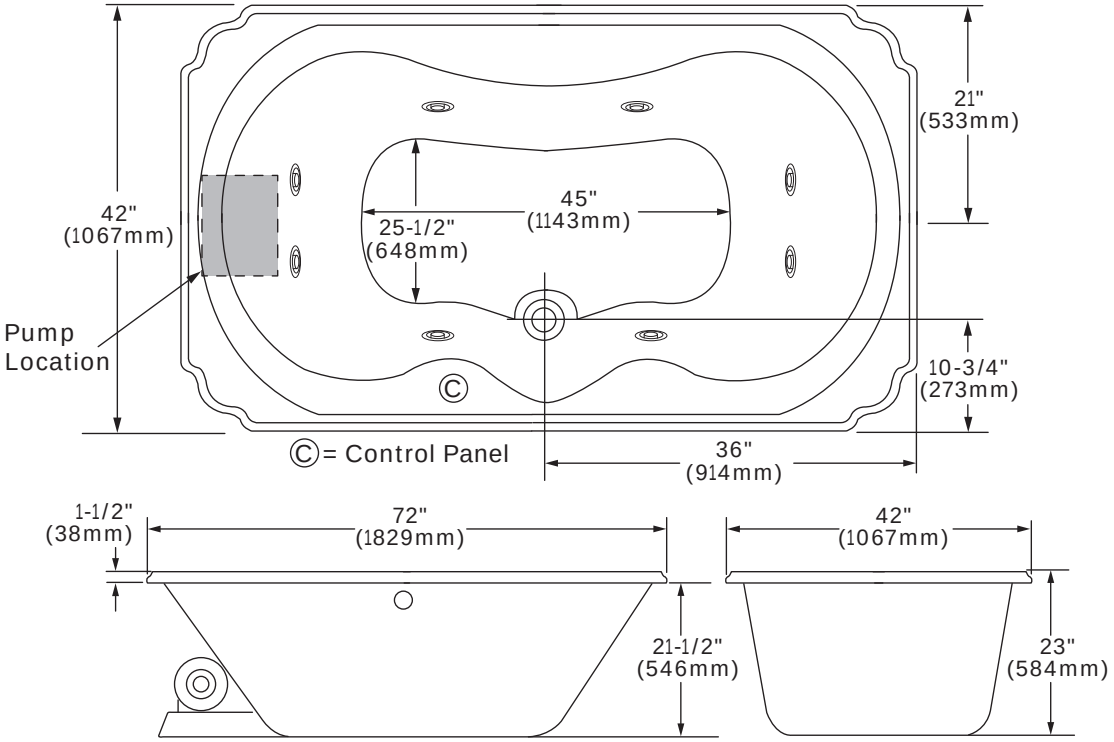

GENESIS MODEL 025-5405

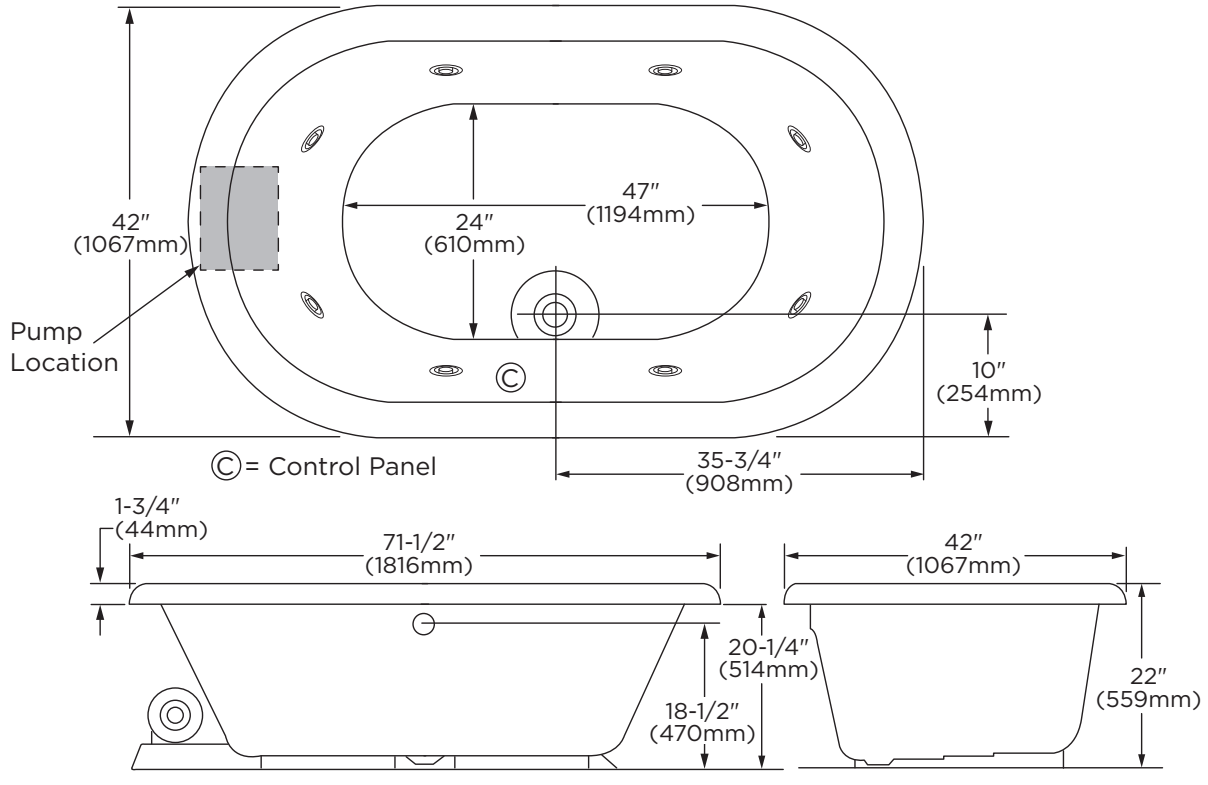

ROUGH-IN REFERENCES

PATRIOT MODEL 025-0155 / 025-0159

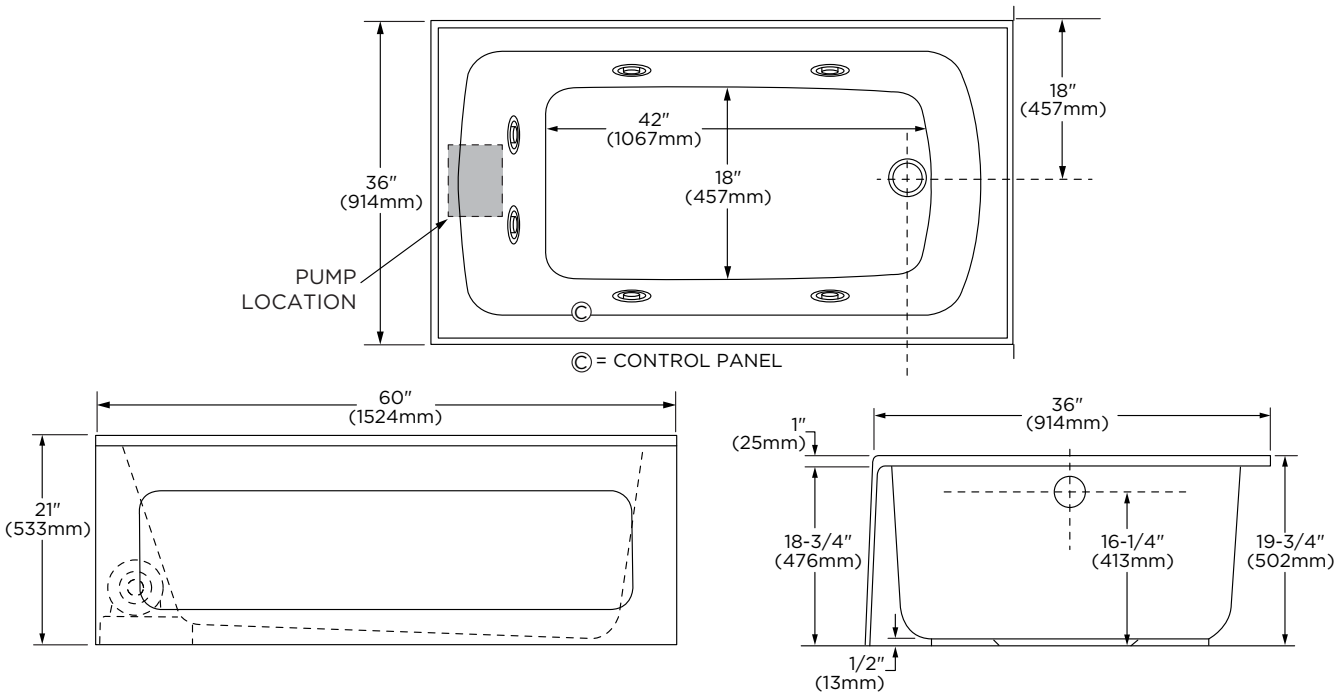

CASANOVA MODEL 025-4805

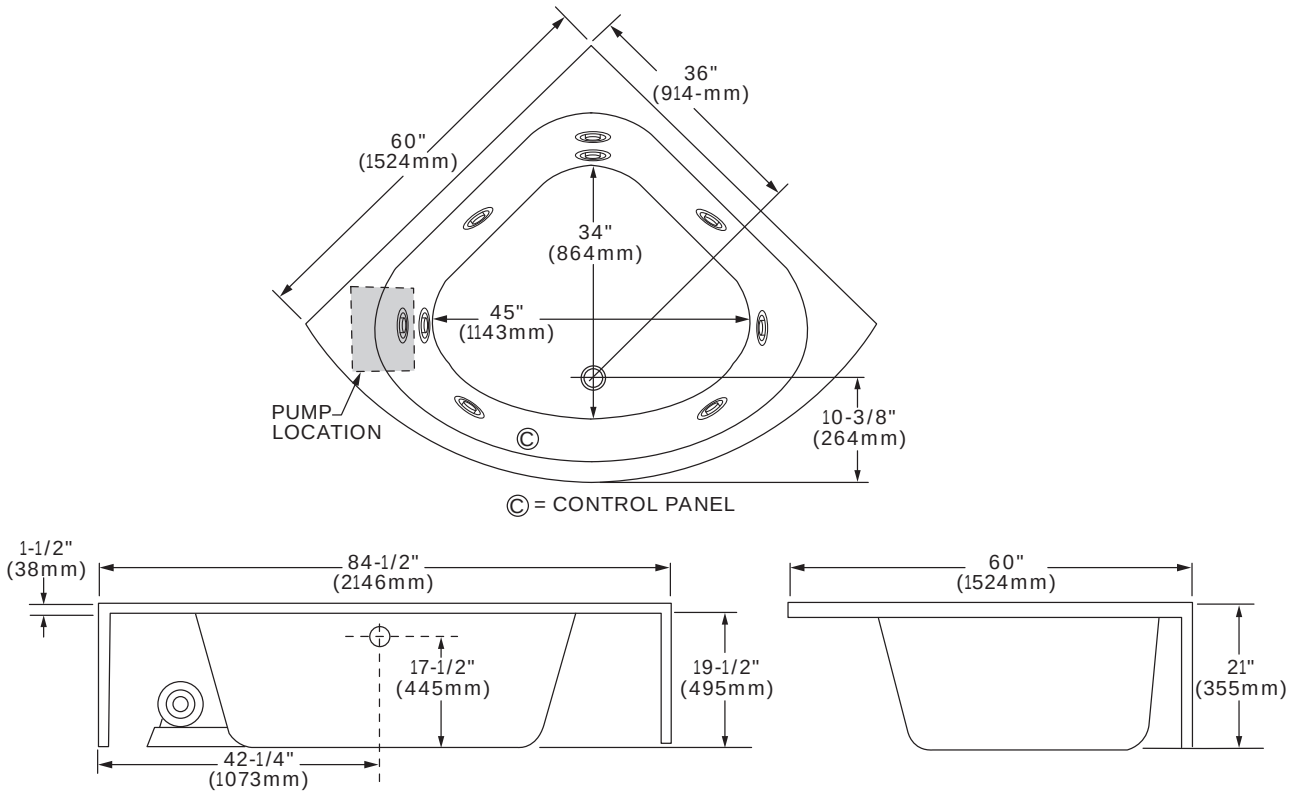

ELECTRICAL INSTALLATION INSTRUCTIONS

All wiring must be performed by a licensed electrician in accordance with the national electrical code and all other applicable codes.

WARNING:

When using electrical products, basic precautions should always be observed, including the following:

1. **DANGER: RISK OF ELECTRIC SHOCK**

   Connect only to a circuit protected by a ground-fault circuit interrupter.

2. Grounding is required. The unit should be installed by a licensed electrician and grounded.

3. Install to permit access for servicing.

4. All building materials and wiring should be routed away from the pump body and heater (if equipped).

AIR SWITCH WHIRLPOOLS

The whirlpool should be installed on a 120 vac, 15 amp dedicated circuit. The circuit should be hard-wired from the electrical power supply panel. The circuit must be a three (3) wire circuit from the electrical supply panel. A grounded neutral wire and a third wire, earth ground, are essential. **A SEPARATE 15 AMP MAXIMUM GFCI CIRCUIT IS REQUIRED IF THE OPTIONAL HEATER IS INSTALLED (SEE INSTALLATION INSTRUCTIONS SUPPLIED WITH THE HEATER MODEL NUMBER – 494-1000).**

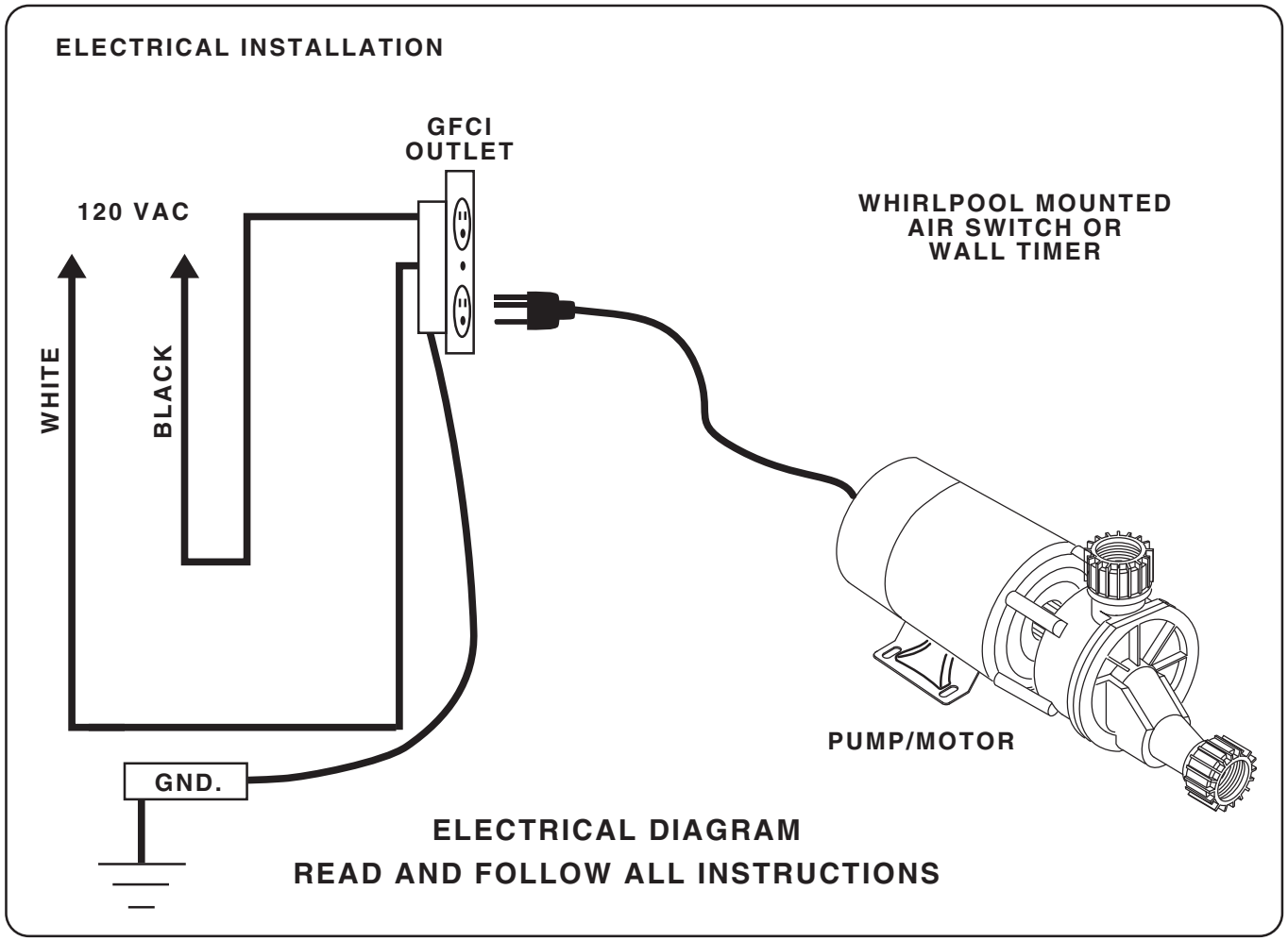

ELECTRICAL INSTALLATION INSTRUCTIONS *(continued)*

WHIRLPOOL PLUS AIR BATH COMBINATIONS

The whirlpool pump and blower should be installed on a 120 vac, 20 amp dedicated circuit. The circuit should be hard-wired from the electrical power supply panel. The circuit must be a three (3) wire circuit from the electrical supply panel. A grounded neutral wire and a third wire, earth ground, are essential. **A SEPARATE 15 AMP MAXIMUM GFCI CIRCUIT IS REQUIRED IF THE OPTIONAL HEATER IS INSTALLED (SEE INSTALLATION INSTRUCTIONS SUPPLIED WITH THE HEATER MODEL NUMBER – 494-1000).**

TOTAL MASSAGE CIRCUIT WITH OPTIONAL WATER HEATING ELEMENT

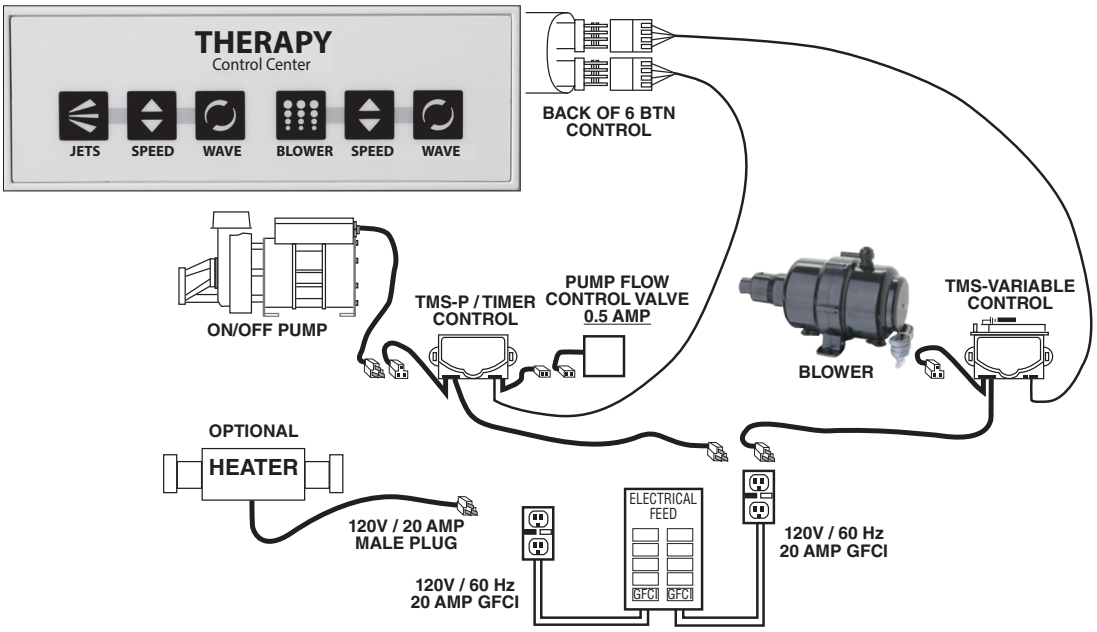

The Whirlpool plus Air Bath combination control pad contains six (6) buttons.
Three controls on the "Therapy Control Center" operate the whirlpool and the bottom three controls operate the air system. The whirlpool and air massages systems may be used at the same time if desired.
The air bath is controlled by a three button control:

1. The first button switches the blower on or off. The other features will not operate unless the blower is turned on.
2. The second button sets the power level of the blower. Holding the button depressed will cycle the blower power from low to high in a continuous cycle. When the desired level is reached, remove your finger quickly from the button to maintain that power setting.
3. The third button is a three step wave action button. Once activated, the air holes expell air in a slow pulsating flow called wave action. There are 3 steps or positions for wave strength.
   a. Position #1 operates the blower at a steady flow.
   b. Position #2 operates the blower at a quick wave action.
   c. Position #3 operates the blower at a slower wave action.

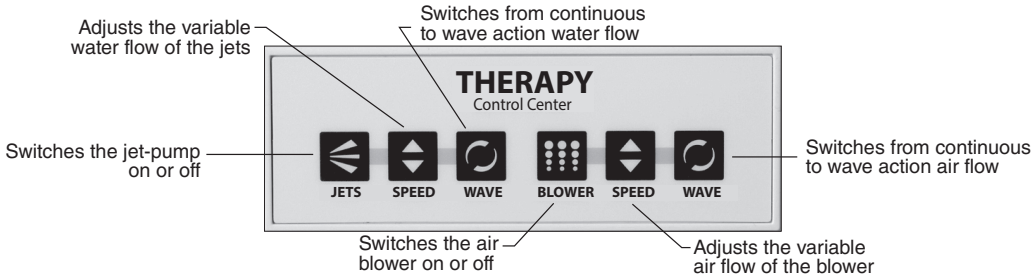

WHIRLPOOL PLUS AIR BATH COMBINATION UNITS ARE EQUIPPED WITH AN AUTOMATIC CLEANING AND PURGE CYCLE

Air Baths have a preprogrammed cleaning and purge cycle built in to expel the remaining water in the air channels. It activates within 20 minutes after the bath is drained, blows for about 2 to 3 minutes and then shuts off automatically. There is nothing to be alarmed about if you hear a blowing noise coming from the tub after the tub has been turned off. The noise you hear is the cleaning cycle in operation.

OPERATING INSTRUCTIONS

1. Fill the bath to at least 3 inches above the jets before activating the pump.
2. The pump is activated by an on/off switch. Each depression of the button switches the power either on or off. Do not repeatedly depress the switch in rapid order if you do not see the whirlpool function right away, as it may take a few seconds before you can see it fully operating.
3. If any factory installed fittings are removed do not operate the unit. A safety hazard may occur.
4. Do not use bubble bath when you operate the whirlpool pump. This might cause excessive foaming.
5. Both air and whirlpool systems are plumbed in a way that water will drain from the plumbing easily.

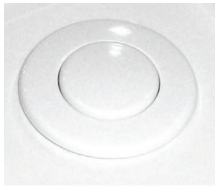

AIR SWITCH

ON-OFF SWITCH

The whirlpool bath pump is activated by a on-off switch. Each depression of the switch will actuate the pump. If off, one depression will turn the pump on. If on, the next depression will turn it off.

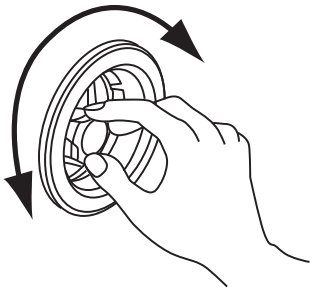

JET OPERATION AND ADJUSTMENT

The jets can be easily adjusted by pointing the jet-nozzle in the desired direction. For units with Hydro Jets, the strength of the waterflow and air induction can be regulated through twisting the jet-nozzle. Twisting the nozzle clockwise will decrease the water flow and finally completely turn off the water flow of that particular jet. If the nozzle is twisted counter- clockwise then the water flow will increase up to its maximum flow.

ADJUSTABLE FLOW CLEAN JET™:

The water flow action may be adjusted from vigorous to soft by rotating the nozzle clockwise for vigorous and counterclockwise for soft.

NOTE: You may balance the air volume control and nozzle adjustment for the most desirable condition.

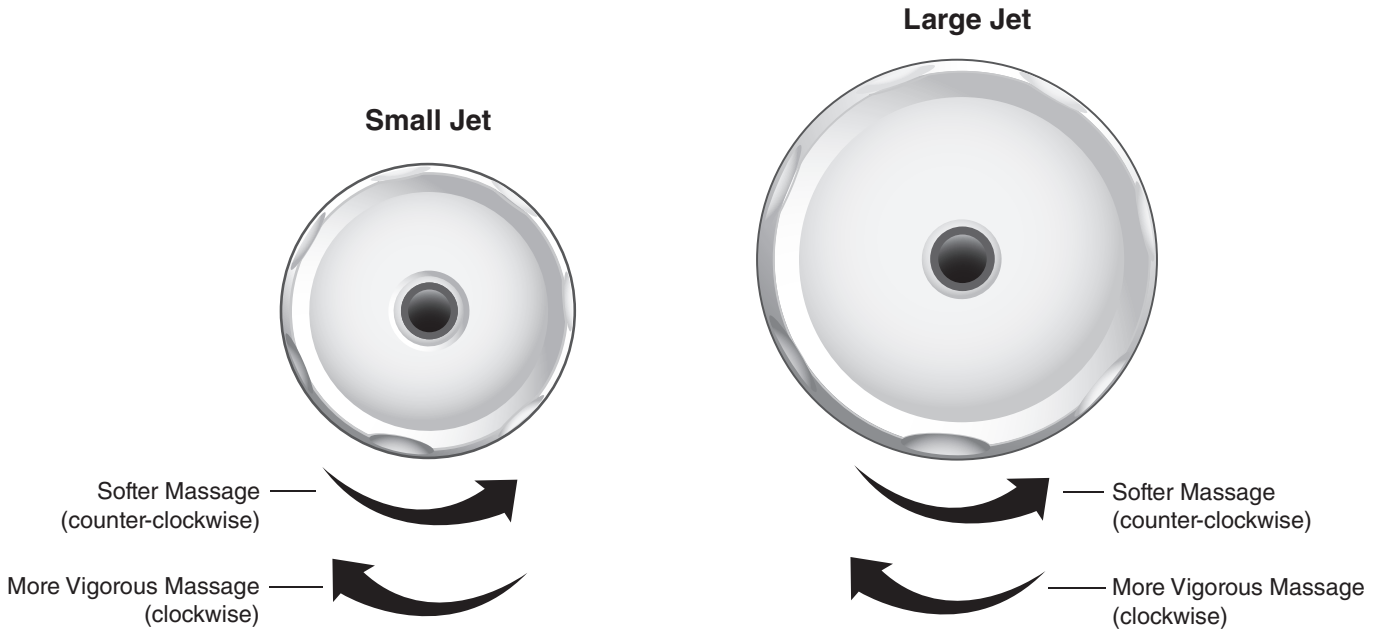

Your Eljer whirlpool is designed to give you many years of pleasure with reasonable care and maintenance.

Your new acrylic bathtub is tough, durable and easy to care for. The colors have been formulated to match other Eljer fixtures and enhance your choice of bathroom decorations. The high gloss surface will retain its lasting luster with proper care and maintenance.

CLEANING AND MAINTENANCE:

- Always fill the tub with temperate water. Excessively hot water (greater than 130˚ F) may cause surface damage.
- Remove bath mat after use and hang to dry. Allowing bath mat to dry in the tub may cause surface damage.
- Clean after use with a mild liquid household detergent cleaner. Do not turn on jets when such cleaners are present.

Do not use: Lestoil® Cleaner; Lysol® Disinfectant (spray or concentrate); or Lysol® Basin, Tub and Tile Cleaner; Windex® Cleaner; Mr. Clean® Cleaner; Dow® Disinfectant Bathroom Cleaner*; or other cleaning products in aerosol cans.

HARSH CHEMICALS, SHARP AND ABRASIVE OBJECTS SHOULD NEVER BE USED ON ACRYLIC SURFACES

- Do not use wire brushes, knives or sharp objects to remove stains or other surface blemishes.

- Use of abrasive cleaners or powders will dull the surface. If the glossy surface loses its sheen, dulled areas can be partially restored by rubbing with a white automotive body polishing compound and waxing with a liquid wax. ***Do not wax surfaces where you walk or stand.***

- Do not allow nail polish remover, acetone, dry-cleaning fluid, paint remover, or other solvents to come into contact with the surface.

- Clean the surrounding surface immediately after using caustic drain cleaners. ***Do not permit drain cleaner to enter circulation system.***

- Burning cigarettes will irreparably damage the surface of the whirlpool.

CLEANING/PURGING THE CIRCULATION SYSTEM

Once every month the circulating system must be purged and cleaned. Follow the steps outlined below:

1. Fill whirlpool with warm water and add two teaspoons of powdered automatic dishwasher (not laundry) detergent and one-half cup of household bleach to filled whirlpool.
2. Activate whirlpool system in accordance with operating instructions and run system for two minutes.
3. Drain and refill whirlpool with cold water. Circulate for five minutes.
4. Drain whirlpool completely after step 3 (above) is completed.

For Troubleshooting and Repair Parts please log on to www.eljer.com

* Lestoil® is a registered trademark of The Clorox Company.
Lysol® is a registered trademark of The Linden Company.
Windex® is a registered trademark of S.C. Johnson and Son, Inc.
Mr. Clean® is a registered trademark of The Proctor and Gamble Company.
Dow® is a registered trademark of The Dow Chemical Company.

AS AMERICA, INC. LIMITED LIFETIME WARRANTY FOR ELJER PREMIERE SERIES ACRYLIC TUBS, WHIRLPOOLS AND AIR BATHS

AS America, Inc. ("American Standard") warrants to the original consumer purchaser that it will, at its option, repair or replace this tub or any of its parts that are found by American Standard, in its sole judgment, to be defective under normal residential use and maintenance so long as it is owned by the original consumer purchaser.

This limited warranty does not apply to commercial installations. The warranty for commercial installations is three (3) years.

THIS WARRANTY SHALL BE VOID IF THE ACCESS PANEL TO THE WHIRLPOOL IS COVERED IN ANY MANNER CONTRARY TO THE INSTALLATION INSTRUCTIONS. In no event will American Standard be liable for the cost of repair or replacement of any installation materials including but not limited to tiles, marble etc.

This limited warranty DOES NOT COVER the following:

1. Defects or damages arising from shipping, installation, alterations, accidents, abuse, misuse, lack of proper maintenance and cleaning as directed in the owner's manual and use of other than genuine American Standard replacement parts, in all cases whether caused by a plumbing contractor, service company, the owner or any other person.
2. Deterioration through normal wear and tear and the expense of normal maintenance.
3. Commercial application.
4. Options and accessories. American Standard's limited warranty on these items is lifetime for parts and shell and five (5) years on labor. This lifetime limited warranty covers accessories manufactured by American Standard (e.g. aprons, drains, grab bars, trim kits) against defects of material or workmanship. Warranty coverage begins on the date the accessory was originally purchased by the owner.
5. American Standard's limited warranty on the heater is two (2) years and five (5) years on labor. Warranty coverage begins on the date of original purchase by the owner.
6. Postage or shipping costs for returning products for repairs or replacement under this limited warranty and labor or other costs incurred in connection with product removal or installation under this limited warranty.
7. ANY LIABILITY FOR CONSEQUENTIAL OR INCIDENTAL DAMAGES, ALL OF WHICH ARE HEREBY EXPRESSLY DISCLAIMED, OR THE EXTENSION BEYOND THE DURATION OF THIS LIMITED WARRANTY OF ANY IMPLIED WARRANTIES, INCLUDING THOSE OF MERCHANTABILITY OR FITNESS FOR AN INTENDED PURPOSE. (Some jurisdictions do not allow limitations on how long an implied warranty lasts, or the exclusion or limitation of incidental or consequential damages, so these limitations and exclusions may not apply to you.)
8. Responsibility for compliance with local code requirements. (Since local code requirements vary greatly distributors, retailers, dealers, installation contractors and users of plumbing products should determine whether there are any code restrictions on the installation or use of a specific product.)

This limited warranty gives you specific legal rights. You may have other statutory rights that vary from state to state or province to province, in which case this limited warranty does not affect such statutory rights.

For service under this warranty, it is suggested that a claim be made through the contractor or dealer from or through whom the product was purchased, or that a service request (including a description of the product model and of the defect) be sent to the following address:

In the United States:
AS America, Inc.
P.O. Box 6820
Piscataway, New Jersey 08855
Attention: Director of Customer Care
For residents of the United States, warranty information may also be obtained by calling the following toll free number: (800) 442-1902
www.eljer.com

In Canada:
AS Canada, ULC
5900 Avebury Rd.
Mississauga, Ontario
Canada L5R 3M3
Toll Free: (800) 387-0369
www.eljer.com

In Mexico:
American Standard B&K Mexico
S. de R.L. de C.V.
Via Morelos #330
Col. Santa Clara
Ecatepec 55540 Edo. Mexico
Toll Free: 01-800-839-1200
www.eljer.com