ACCLAIM LIGHTING
INTERIOR • OUTDOOR

# 1732
# INSTALLATION INSTRUCTIONS

Please read carefully and save these instructions, as you may need them at a later date.

## CAUTION

WARNING: Risk of Fire. Consult a qualified electrician to ensure correct branch circuit conductor. Min 90ºC supply conductors.

Turn off the main power at the circuit breaker before installing the fixture, in order to prevent possible shock.

## GENERAL

All electrical connections must be in accordance with local and National Electrical Code (N.E.C.) standards. If you are unfamiliar with proper electrical wiring connections obtain the services of a qualified electrician.

Remove the fixture and the mounting package from the box and make sure that no parts are missing by referencing the illustrations on the installation instructions.

## ASSEMBLY AND INSTALLATION

1. Thread two Mounting Screws (8) through the Mounting Bar(9) and secure with the Hex Nut(7).
2. Secure the Mounting Bar(9) with Box Screws (10) to the Outlet Box(1).
3. Pull out the outlet wire and ground wire from the Outlet Box(1).Make wire connections
   --Ribbed/White wire (w/o marking) from light to White wire(2) from power source.
   --Smooth/Black wire (w/o marking) from light to Black wire(3) from power source.
   --Loop the ground wire(4) to mounting bar(9) with a green screw(6).
4. Attach the Back Plate(11) against the Outlet Box(1), secure with Rubber Ring (13) & Ball Nut(12).
5. Install bulb: (bulb not included)
6. Place the Glass (16) over the Lamp Body (14) then gently twist the Glass to lock it.
7. Seal the fixture by putting silicone (not included) around the back plate.

INSTALLATION IS NOW COMPLETED

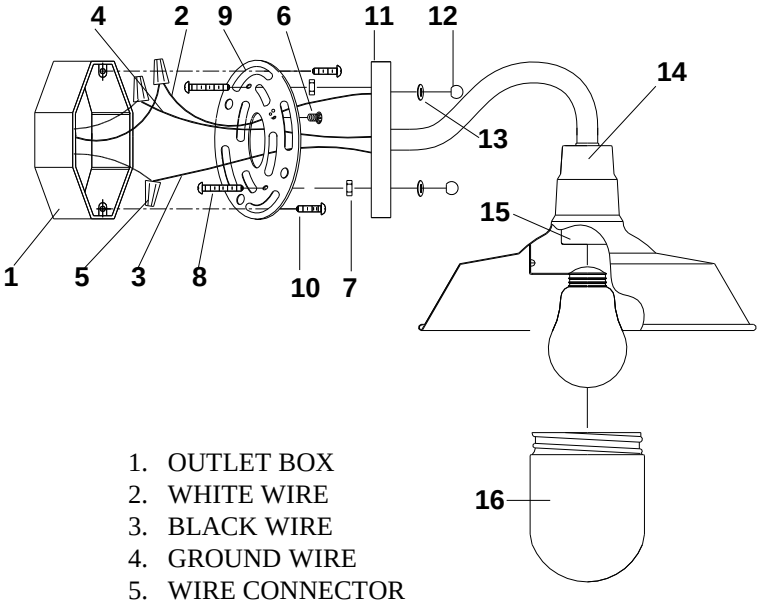


1. OUTLET BOX
2. WHITE WIRE
3. BLACK WIRE
4. GROUND WIRE
5. WIRE CONNECTOR
6. GREEN SCREW
7. HEX NUT
8. MOUNTING SCREW
9. MOUNTING BAR
10. BOX SCREW
11. BACK PLATE
12. BALL NUT
13. RUBBER RING
14. LAMP BODY
15. SOCKET
16. GLASS